SERVICE MANUAL

SCREW COMPRESSOR

FAC-212P (HINO) ←	PDS750S-4B1
FAC-185P (HINO) ←	PDS655S-4B1/4B2
FAC-185PD (HINO) ←	PDS655SD-4B1/4B2
FACF-150P (HINO) ←	PDSF530S-4B1/4B2

HOKUETSU INDUSTRIES CO., LTD.

Preface

This service manual explains about the cautions for maintenance jobs and is to serve a guide for the electric system, and troubleshooting for service personnel.

In this book the fundamental matters and other things already mentioned in the “Instruction Manual” and the “Parts Catalogue” are omitted to avoid duplication.
Therefore, for the operation and handling of this unit, we request you to refer to the instruction manual and caution plates, and further for the structure and components of the unit, please refer to the “Parts Catalogue” separately to be supplied with the unit.
If you should find any description which does not coincide with the instruction manual and parts catalog, we request you to make sure to start the job after clarifying it.

Service personnel is required to safely take quick and proper countermeasures as well as to use correct technology of maintenance in case of field services and periodical maintenance.
It is important that service personnel should have proper and sufficient knowledge about the structure and function of the unit and should be well familiar with such technique mentioned in them.

Table of Contents

1. Specification

1.1 Specifications

Item		unit	PDS655S-4B1[4B2] Trailer type	PDS655SD-4B1[4B2] Dry air type
Compressor	Type		Single-stage oil cooled, screw type compressor	
	Free air delivery	m^3/min	18.5	
	Working pressure	MPa (kgf/cm^2)	0.7(7.1)	
	Lubricating system		Forced Lubrication by compressed pressure	
	Driving system		Direct driving with rubber coupling	
	Receiver tank capacity	m^3	0.189	
	Lubricating oil capacity	L	80	
Engine	Model		Hino motors ltd. J08CR-HOCA [J08CV-HOCC]	
	Type		Water-cooled 4-cycle direct injection	
	Number of cylinders, bore stroke		6 － 114mm × 130mm	
	Compression ratio		19.2：1	
	Total displacement	L(cc)	7.961(7,961)	
	Rated output	kW(PS)	129(175) [118(160)]	
	Revolution per minute	min^{-1}	2,500	
	Fuel consumption	g/kW・h (g/PS・h)	240(176) [251.5(185)]	
	Overall length×Overall width×Overall height	mm	1,275 × 711 × 902	
	Net dry mass	kg	565	
	Starter	kW	4.5	
	Manufacturer		SAWAFUJI ELECTRIC	
	Alternator	A	35	
	Manufacturer		SAWAFUJI ELECTRIC	
	Battery		115F51×2	
	Fuel tank capacity	L	270	
	Lubricating oil capacity	L	23	
	Lubricating oil capacity H～L	L	23～15 (Oil pan capacity)	
	Coolant capacity (including radiator)	L	29	35
	Belt size		A-1205	
Weight・Mass	Overall length (with drawbar folded up)	mm	3,650	
	Overall length (Bonnet only)	mm	3,450	
	Overall width	mm	1,685	
	Overall height	mm	2,070	
	Net dry mass	kg	2,850	3,100
	Operating mass	kg	3,190	3,460
Size of exhaust pipe		mm	φ110	

1. Specification

Item		unit	PDSF530S-4B1[4B2] Trailer type	PDSF530S-[4B2] Dry air type	PDS750S-4B1 Trailer type
Compressor	Type		Single-stage oil cooled, screw type compressor		
	Free air delivery	m^3/min	15		21.2
	Working pressure	MPa (kgf/cm^2)	1.05(10.7)		0.7(7.1)
	Lubricating system		Forced Lubrication by compressed pressure		
	Driving system		Direct driving with rubber coupling		
	Receiver tank capacity	m^3	0.189		
	Lubricating oil capacity	L	80		
Engine	Model		Hino motors ltd. J08CR-HOCA [J08CV-HOCC]		Hino motors ltd. J08CUT-HOCB
	Type		Water-cooled 4-cycle direct injection		Water-cooled 4-cycle direct injection type with turbo charged
	Number of cylinders, bore stroke		6 － 114mm × 130mm		
	Compression ratio		19.2：1		
	Total displacement	L(cc)	7.961(7,961)		
	Rated output	kW(PS)	129(175) [118(160)]		144.5(196)
	Revolution per minute	min^{-1}	2,500		2,100
	Fuel consumption	g/kW・h (g/PS・h)	240(176) [251.5(185)]		235(173)
	Overall length×Overall width×Overall height	mm	1,275 × 711 × 902		
	Net dry mass	kg	565		
	Starter	KW	4.5		
	Manufacturer		SAWAFUJI ELECTRIC		
	Alternator	A	35		
	Manufacturer		SAWAFUJI ELECTRIC		
	Battery		115F51×2		
	Fuel tank capacity	L	270		310
	Lubricating oil capacity	L	23		
	Lubricating oil capacity H～L	L	23～15 (Oil pan capacity)		
	Coolant capacity (including radiator)	L	29	35	29
	Belt size		A-1205		
Weight・Mass	Overall length (with drawbar folded up)	mm	3,650		
	Overall length (Bonnet only)	mm	3,450		
	Overall width	mm	1,685		
	Overall height	mm	2,070		
	Net dry mass	kg	2,890	3,160	2,950
	Operating mass	kg	3,230	3,500	3,300
Size of exhaust pipe		mm	ϕ 110		

1.2 Outline drawing

PDS750S-4B1、PDS655S[SD]-4B1/4B2、PDSF530S-4B1/4B2

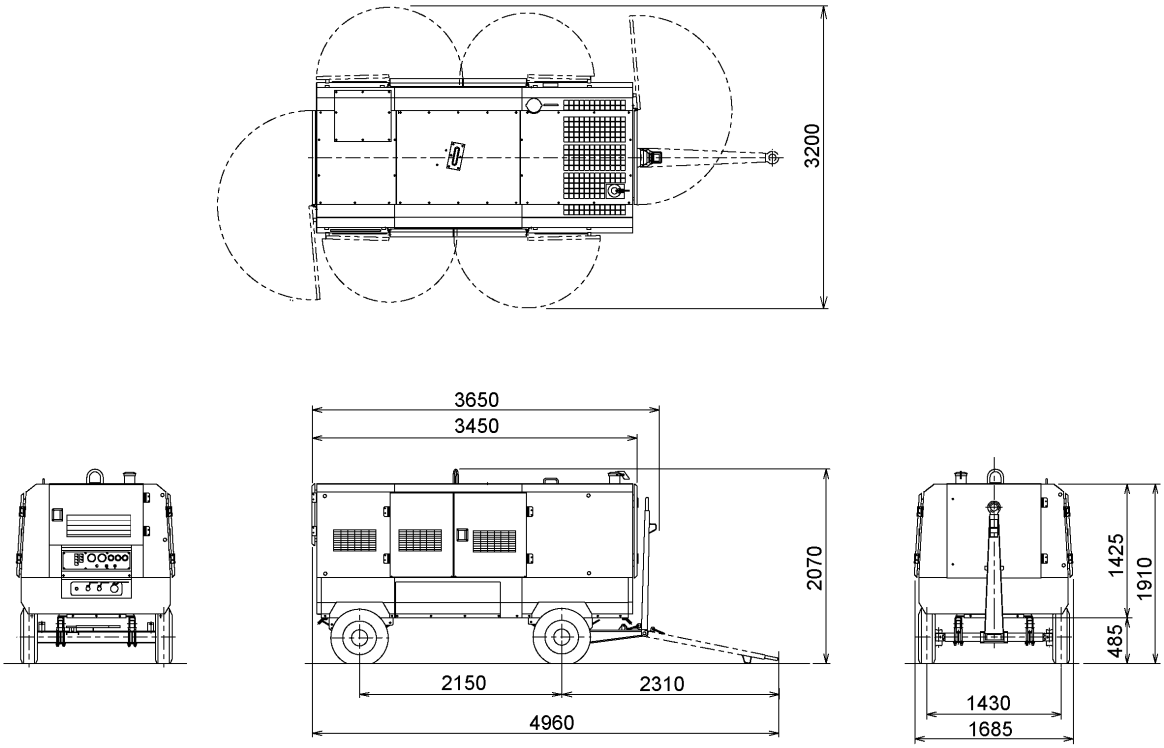

PDS655S [SD]-4B2

H000487

1.3 Internal Components and Part Names

PDS655S-4B1、PDSF530S-4B1

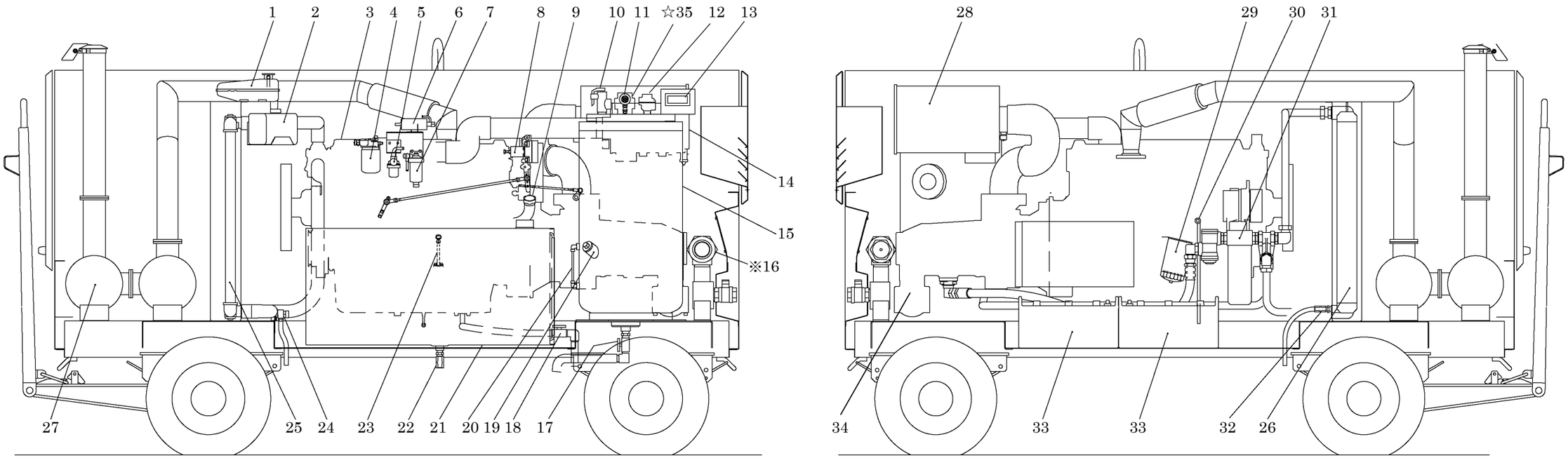

Parts marked ☆ are provided for PDSF530S-4B1 only.

Parts marked ※ are provided for PDS655S-4B1. PDSF530S-4B1 is different in its shape and its fitting position from the other models.

H000471

1.Header tank
2.Reserve tank
3.Engine
4.Fuel filter
5.Filter for electromagnetic pump
6.Electromagnetic pump
7.Water sedimenter
8.Speed regulator
9. Engine oil filler port
10. Safety valve
11. Pressure regulator
12. Auto-relief valve
13. Differential pressure gauge for oil separator
14. Air filter element (engine)
15. Separator receiver tank
16. Pressure control valve
17. Drain valve for separator receiver tank
18. Engine oil drain valve
19. Compressor oil filler port
20. Compressor oil level gauge
21. Fuel tank
22. Fuel tank drain valve
23. Engine oil level gauge
24. Coolant drain valve (radiator)
25. Radiator
26. Oil cooler
27. Exhaust muffler
28. Air filter element (compressor)
29. Engine oil filter
30. Coolant drain plug (engine)
31. Compressor oil filter
32. Oil cooler drain valve
33. Battery
34. Compressor air-end
35. Vacuum relief valve

1. Specification

PDS655SD-4B1 (Dry air type)

Only the accessories or attachments which are additionally (optionally) fitted and modified upon request are shown in the following figures.

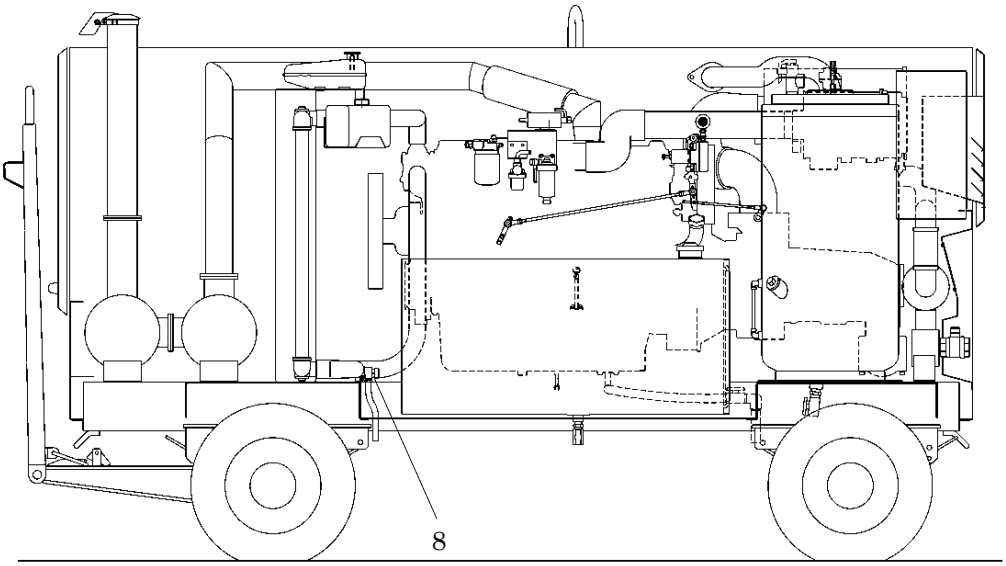

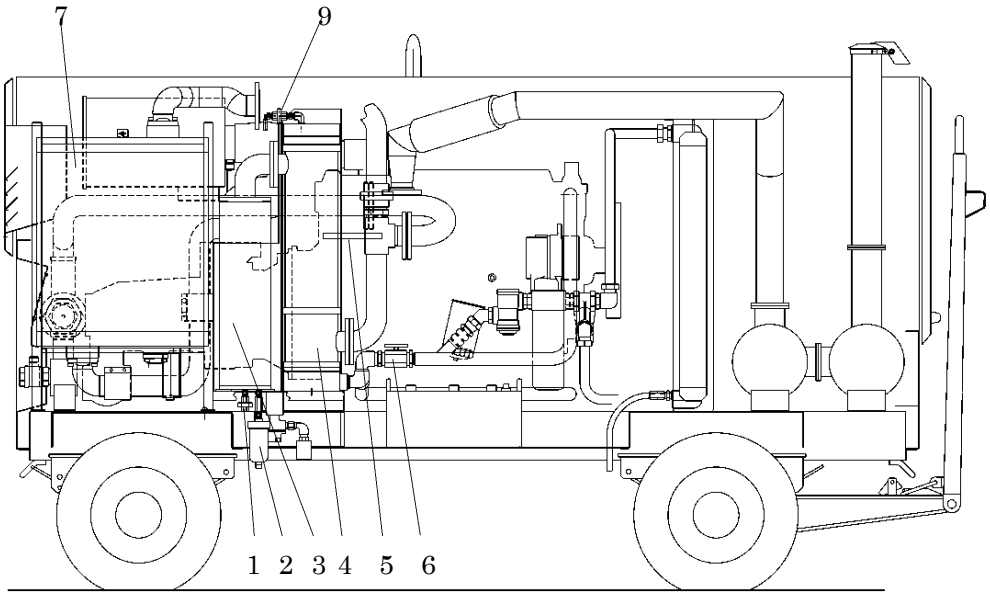

A010290

1. Hand operated drain valve
2. Auto drain valve
3. Drain tank
4. Air warmer
5. Dehumidifier selector valve
6. Temperature selector valve
7. After cooler
8. Coolant drain valve
9. Air bleeder valve

PDS750S-4B1、PDS655S-4B2、PDSF530S-4B2

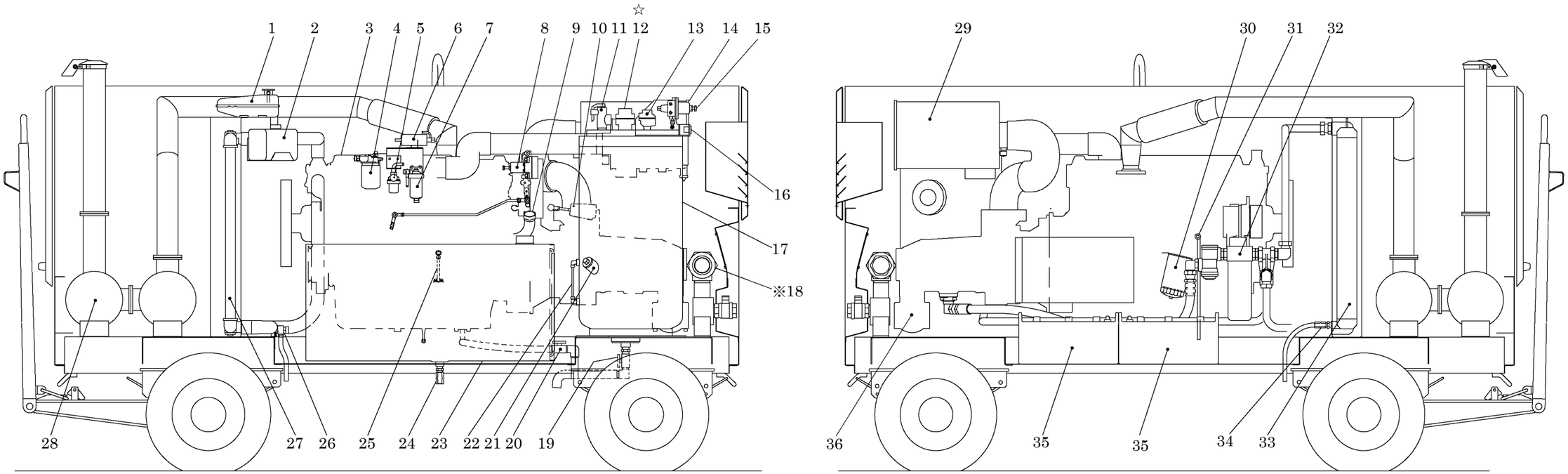

A030226

Parts marked ☆ are provided for PDS750S-4B1,PDSF530S-4B2 only.

Parts marked ※ are provided for PDS750S-4B1,PDS655S-4B2 only. PDSF530-4B2 is different in its shape and its fitting position from the other models.

1.Header tank
2.Reserve tank
3.Engine
4.Fuel filter
5.Filter for electromagnetic pump
6.Electromagnetic pump
7.Water sedimenter
8.Speed regulator
9. Engine oil filler port
10.Unloader regulator
11.Safety valve
12.Vacuumrelief valve
13.Auto-relief valve
14. Air filter element (engine)
15.Pressure regulator
16.Differential pressure gauge for oil separator
17.Separator Receiver Tank
18.Pressure control valve
19.Drain valve for separator receiver tank
20.Engine oil drain valve
21.Compressor oil filler port
22. Compressor oil level gauge
23.Fuel tank
24.Fuel tank drain valve
25.Engine oil level gauge
26.Coolant drain valve (radiator)
27.Radiator
28.Exhaust muffler
29.Air filter element (compressor)
30.Engine oil filter
31.Coolant drain plug (engine)
32.Compressor oil filter
33.Oil cooler
34. Oil cooler drain valve
35.Battery
36.Compressor air-end

1. Specification

PDS655SD-4B2、PDSF530S-4B2 (Dry air type)

Only the accessories or attachments which are additionally (optionally) fitted and modified upon request are shown in the following figures.

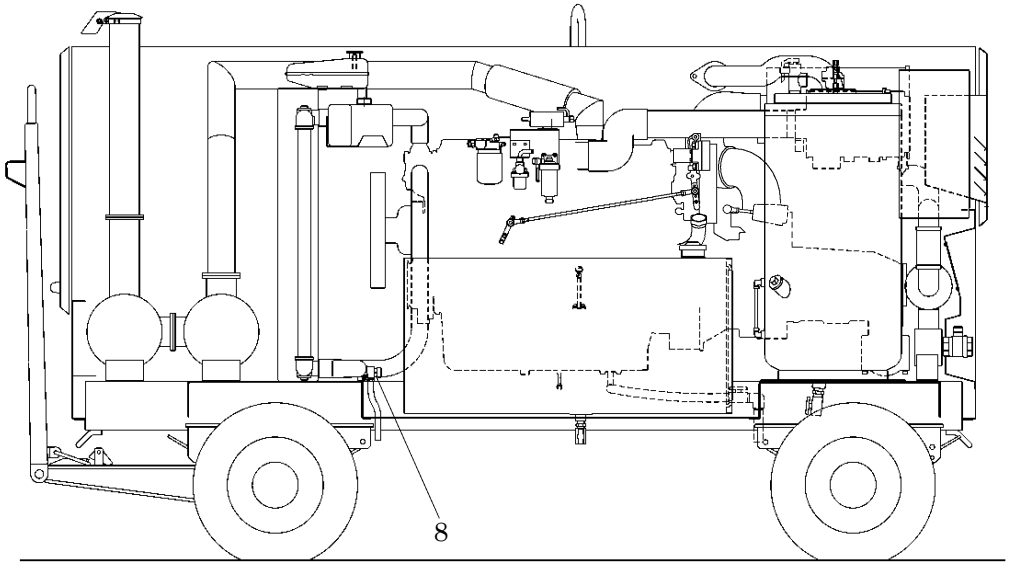

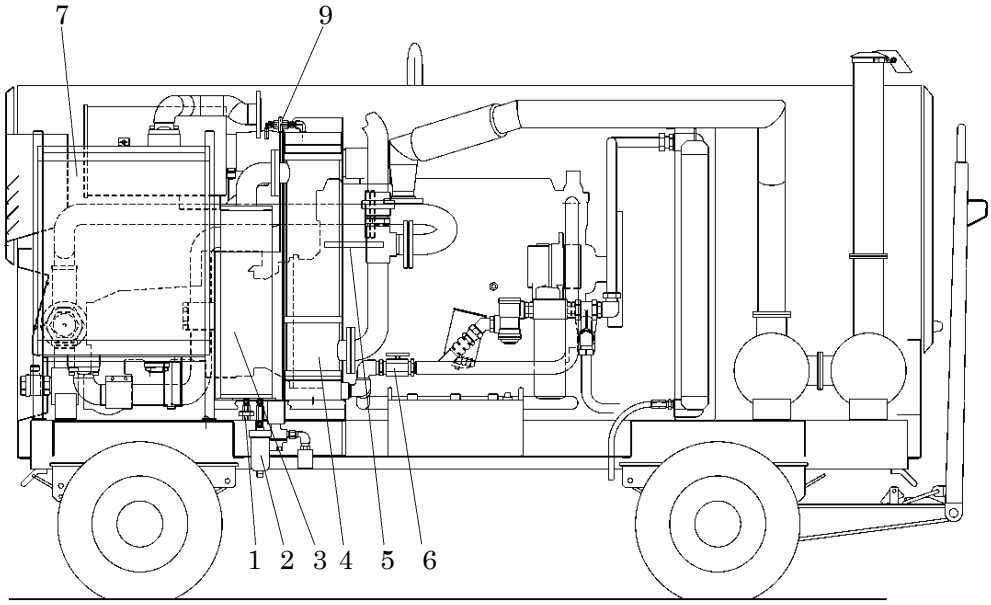

A020262

1. Hand operated drain valve
2. Auto drain valve
3. Drain tank
4. Air warmer
5. Dehumidifier selector valve
6. Temperature selector valve
7. After cooler
8. Coolant drain valve
9. Air bleeder valve

2. Maintenance

2.1 Periodic Inspection List

Such items marked ○ shall be carried out by customers. The columns marked ● shall be done by an expert, because this requires professional knowledge. So please contact nearest distributor or service center.
The following table shows the inspection and maintenance intervals under normal operation conditions. In case the unit is operated under harsh environmental conditions and operation conditions, the intervals should be shortened. (Unit:Hour)

	Maintenance	Daily	250	300	500	1,000	2,000	3,000	6,000	12,000
Compressor	Check compressor oil level.	○								
	Drain separator receiver tank.	○								
	Check looseness in pipe connecting part, and wear and tear of pipe.	○								
	Check oil, water, fuel and air leak.	○								
	Check performance of gauge and indication lamps.	○								
	Performance Check of Safety Valve.	○								
	Change compressor oil.			※1○	※2○	※3○				
	Change compressor oil filter.			※1○	○					
	Clean strainer in the scavenging orifice.				○					
	Clean and Change air filter element.		○ (Clean)		○ (Change)					
	Drain condensate from air piping system. (Dry air supplying type only)		○							
	Clean outside of the oil cooler.					○				
	Clean outside of the after cooler. (Dry air supplying type only)					○				
	Clean auto drain valve. (Dry air supplying type only)					○				
	Supply grease to trailer spring pin (Trailer type only)					○				
	Change speed regulator diaphragm.					●				
	Change pressure regulator diaphragm.					☆2●				
	Change pressure regulator							☆1●		
	Change oil separator.						○			
	Change nylon tubes.						●			
	Change unloader regulator diaphragm.							☆2●		
	Check and Change rubber hoses.							●		
	Check diaphragm of auto-relief valve.							●		
	Clean butterfly valve (unloader)							●		
	Change diaphragm and o-ring of vacuum-relief valve (PDSF530S only)							●		
	Change o-ring of pressure control valve (PDSF530S only)							●		
	Replace the parts of pressure control valve (spare kit).								●	
	Change rubber coupling.									●
	Change oil seal and bearing									●

※1: primary change interval.
※2: change interval for the units for which “AIRMAN Compressor Oil All Seasons” is used.
※3: change interval for the units for which “AIRMAN Compressor Oil Longlife” is used.
☆1: change interval for PDS655S [SD]-4B1 and PDSF530S-4B1.
☆2: change interval for PDS655S [SD]-4B2, PDSF530S-4B2 and PDS750S-4B1.

2. Maintenance

(Unit:Hour)

	Maintenance	Daily	50	250	500	1,000	2,000	3,000	6,000
Engine	Drain fuel level. (Including sedimenter.)	○							
	Check fuel level	○							
	Check engine oil level.	○							
	Check coolant level.	○							
	Check looseness in pipe connectors, terminals and tear in wiring.	○							
	Check V-belt tension.	○							
	Change engine oil.		※1○		○				
	Change engine oil filter.		※1○		○				
	Check battery electrolyte.			○					
	Clean and change air-filter element.			○ (Clean)	☆1○ (Change)	☆2○ (Change)			
	Clean and change filter inside the fuel air bleeding electromagnetic pump.				○				
	Clean strainer of fuel air-bleeding electromagnetic pump.				○				
	Change fuel filter.				○				
	Clean the strainer provided inside the engine feed pump.					○			
	Change coolant.					○			
	Clean outside of radiator.					○			
	Clean inside of radiator.					●			
	Check and Change fuel hose.						●		
	Clean inside of fuel tank.						●		
	Change radiator hoses.							●	
	Change wiring harness.								●

※1: primary change interval.
☆1: change interval for PDS655S [SD]-4B1 and PDSF530S-4B1.
☆2: change interval for PDS655S [SD]-4B2, PDSF530S-4B2 and PDS750S-4B1.

2.2 Maintenance procedures

General or routine maintenance should be performed in accordance with operation manual. In this clause, such maintenance items which are not mentioned in the manual, and specially important items are mentioned.

2.2.1 Tightening torque for hose, joint etc…

(1) Rubber hose piping

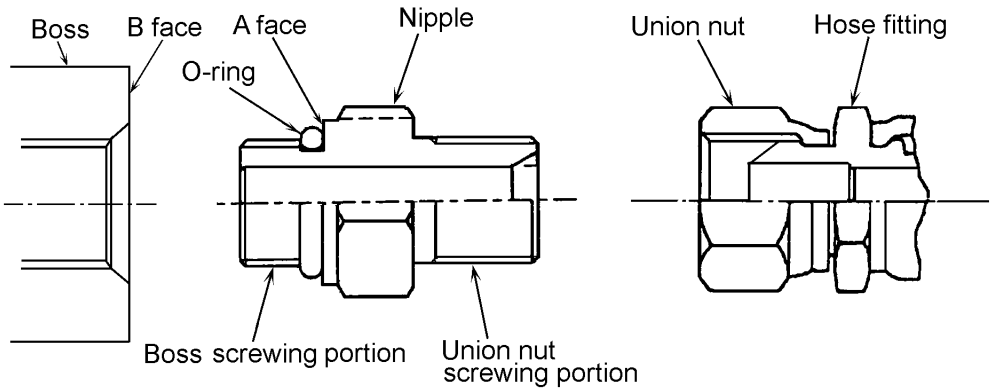

<How to tighten Nipple>

① Check for any damage and twist the O-ring which is fitted on boss screwing portion.

② Screw in a nipple to the boss at the pipe end and tighten the nipple till A face of nipple contacts B face of boss.

<How to tighten union nut>

Should be tighten Union nut according to following torque.

Parallel thread for pipe		
Bolt size G (PF)	Tool Width of across flat (mm)	Tighten torque N・m (kgf・cm)
1/4	19(17)	25 (250)
3/8	22(19)	50 (500)
1/2	27(22)	59 (600)
3/4	36(30)	120 (1,200)
1	41(36)	140 (1,400)
1 1/4	50	170 (1,700)
1 1/2	60	210 (2,100)

IMPORTANT

- Excessively tightening of union nut can cause excessive wedging action so that union nut can be broken. So tighten the nut, according to the specified torques.
- Damaged seating surface can cause oil leakage. So take special care when disassembling and reassembling.

(2)Piping of copper pipes

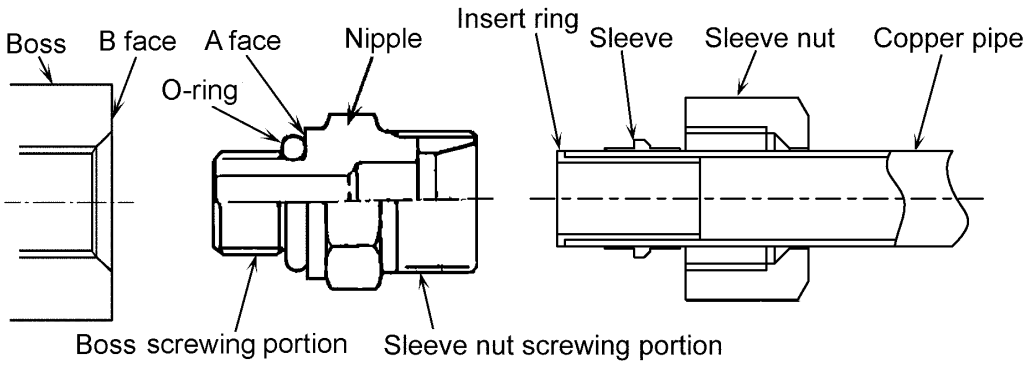

<How to tighten nipple>

① Check for any damage and twist the O-ring which is fitted on boss screwing portion.

② Screw in a nipple to the boss at the pipe end and tighten the nipple till A face of nipple contacts B face of boss.

<How to tighten sleeve nut>

1) Checking pipe

① Make sure that the pipe is already fitted with insert ring, sleeve and sleeve nut.

② Check whether the pipe and insert ring, sleeve nut are caulked aslant or not

③ Visually check and confirm that there are a few millimeters (A point) distance between the pipe end and sleeve.) As an aimed figure, about 3 to 4 mm is required.

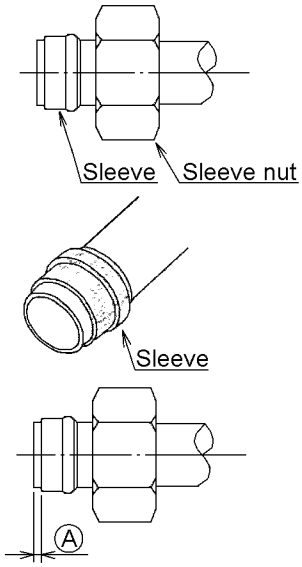

IMPORTANT

- When retightening the sleeve nut after loosening the tightened sleeve nut, mark “match-mark” on the location of the sleeve nut with white chalk before loosening it and then remove it.
  When installing the sleeve nut again, tighten it a little further than the original position.

2) Coat pipe and nipple with lubricant.

① Coat sleeve of pipe and sleeve nut with lubricant (NICHIMORI LAP spray or equivalent).

② Coat threaded portion of nipple and seating face with lubricant. Supply oil (full circumference).

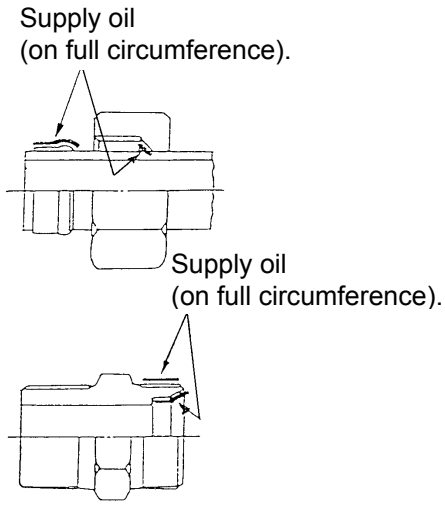

IMPORTANT

- Unless sleeve and sleeve nut are coated with lubricant, they can be caulked and the sleeve can turn together with the nut and it can cause oil leakage.

3) Tightening procedures

① Screw sleeve nut of pipe to nipple. Make sure to tighten sleeve nut to nipple by hand till its “stop end”.

② Holding the nipple side with one spanner, tighten the sleeve nut at the pipe side with another spanner.

③ When tightening the sleeve nut at pipe side, you will find a sudden rise point of tightening torque (sharp torque rise point). You shall give a 1/4 turn tightening to the point, thus interior sleeve getting curved.

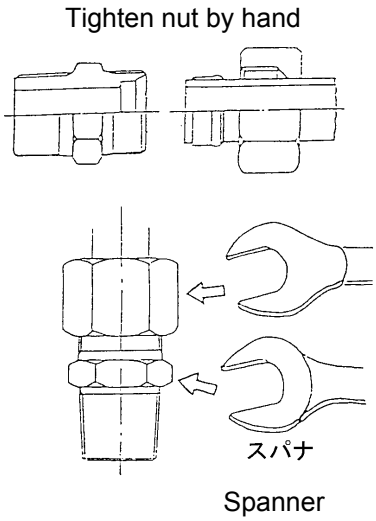

2.2.2 Change Oil Separator

When replacing oil separator (3), do not fail to replace gasket (2) also.

＜Procedures＞

① Remove all the pipes fitted on separator cover (1).

② Remove all the fixing bolts of separator cover (1).

③ Install 2 bolts into 2 bolts holes (2 points). And then dismantle the separator cover (1), lifting it up.

④ Replace the oil separator (3) and gaskets (2) (2 pieces) by new ones.

⑤ Clean and degrease the connecting portion between separator cover (1) and separator receiver tank (4) and check and confirm that there are no damages nor abnormalities.

⑥ Tighten the fixing bolts of separator cover (1) according to the specified torque. (Tighten the bolts diagonally and after tightening all the bolts, ultimately tighten them again in full circumference.)

: 19 mm (PDS655S)

: 24 mm (PDSF530S)

: 43 N･m (425kgf･cm):PDS655S

: 106 N･m (1055kgf･cm):PDSF530S

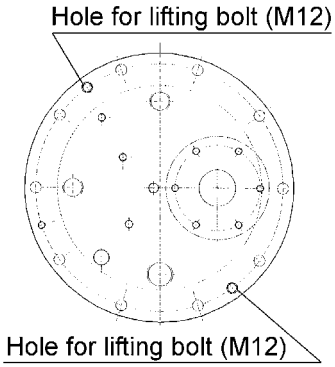

Details of separator cover

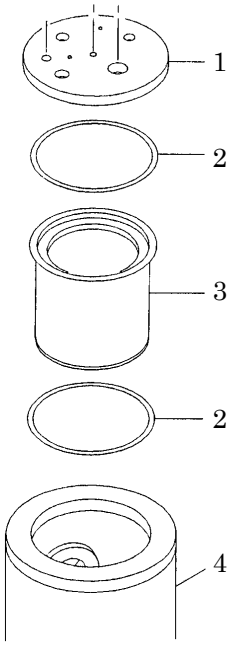

2.2.3 Maintenance and adjustment of pressure control valve

(1) Procedures of pressure adjustment

The set pressure of pressure control valve is already adjusted prior to delivery ex.works. So it is not necessary to re-adjust it and never trifle with it to change the pressure. However, if delivery pressure drops below 0.47MPa (4.75kgf/cm²) [For PDSF530S, lower than 0.39MPa (4.0kgf/cm²)], perform pressure adjustment in accordance with the following procedures.

＜Procedures＞

① Start the unit and fully open service valve.

② Adjust the delivery pressure to 0.47MPa (4.75kgf/cm²) by turning the pressure adjusting ring.
[In case of PDSF530S, adjust delivery pressure to 0.39MPa (4.0kgf/cm²) by turning pressure adjusting bolt after the locknut is loosened.] (Turning it right raises the pressure, and turning to left lowers it.)

PDS750S-4B1,PDS655S[SD]-4B1/4B2 : 11 mm
PDSF530S-4B1/4B2 : 24 mm

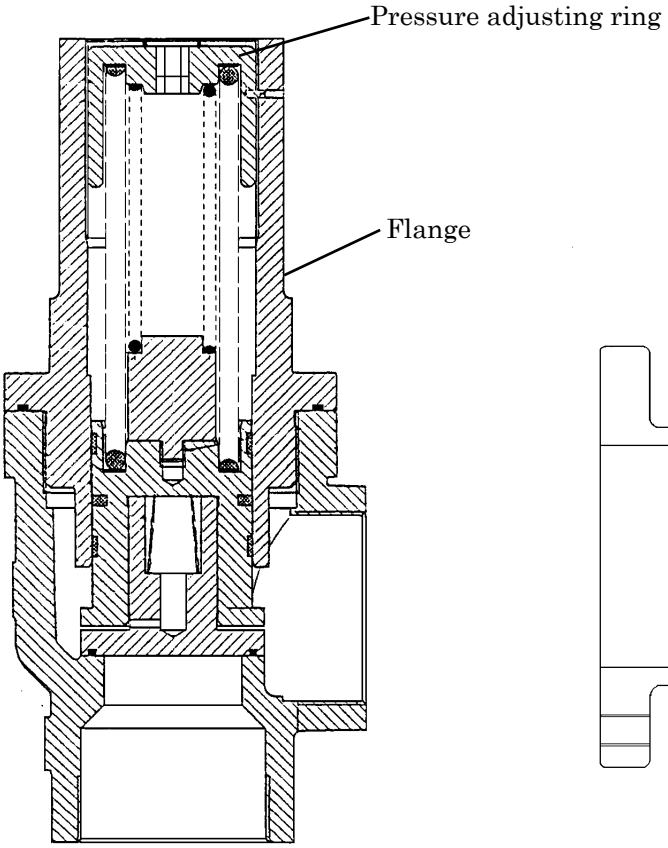

PDS750S-4B1,PDS655S[SD]-4B1/4B2

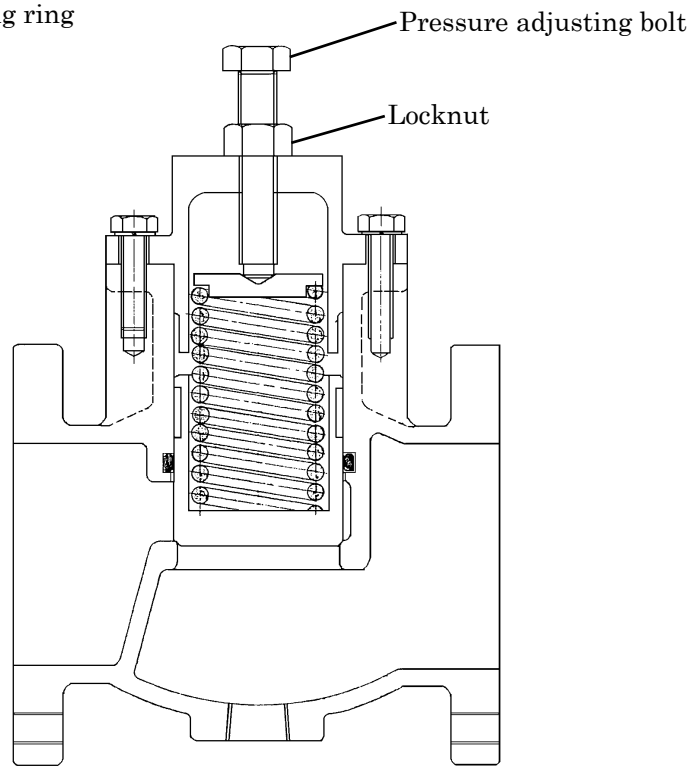

PDSF530S-4B1/4B2

WARNING

- When disassembling the pressure control valve of PDS750S-4B1 and PDS655S [SD]-4B1/4B2, make sure to remove the flange after removing the pressure adjusting ring. If the flange is removed with the pressure adjusting ring fitted, the flange can be jetted out by the interior spring force and it can cause serious accident.

(2)Replacement of consumable parts

PDS750S-4B1,PDS655S[SD]-4B1/4B2

●Replacement of spare kit

＜Procedures＞

① After stopping the unit, make sure that the compressed air in the pipes are completely relieved after opening the service valve.

② Remove the pressure adjusting ring.

: 11 mm

③ Remove the flange by turning it, using a pipe wrench.

④ Take out the spare kit from the inside and replace it by a new kit.

⑤ Coat the connected portion marked ※A with LOKTITE 270 and then tighten it.

⑥ Coat the sliding portion marked ※B with compressor oil (VG32 class or equivalent).

⑦ Spread grease on the threaded portion and sliding portion marked ※C.

⑧ Re-assemble the pressure control valve in reverse order.

⑨ After finishing reassembly, adjust the set pressure in accordance with the pressure adjustment procedures.

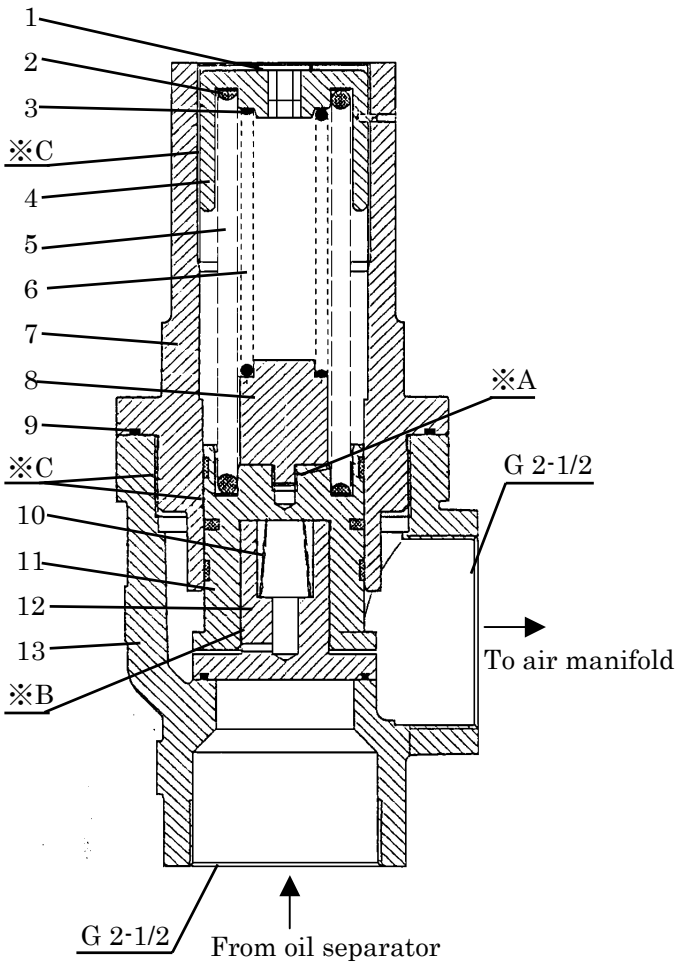

1. Plug
2. Ring a
3. Ring b
4. Pressure adjusting ring
5. Spring a
6. Spring b
7. Flange
8. Piston a
9. O-Ring
10. Spring c
11. Piston b
12. Valve
13. Housing

Spare kit

2. Maintenance

PDSF530S-4B1/4B2

●Replacement of O-ring

＜Procedures＞

① After stopping the unit, make sure that the compressed air in the pipes are completely relieved after opening the service valve.

② Remove the cover fixing bolt.

: 17 mm

③ Take out the O-ring from inside and replace it by a new one.

④ Spread grease on piston outside diameter and the sliding portion marked ※D inside the body.

Grease : EPINOC Grease AP1

⑤ Re-assemble the pressure control valve in reverse order to disassembly.

⑥ After finishing reassembly, adjust the set pressure in accordance with the pressure adjustment procedures.

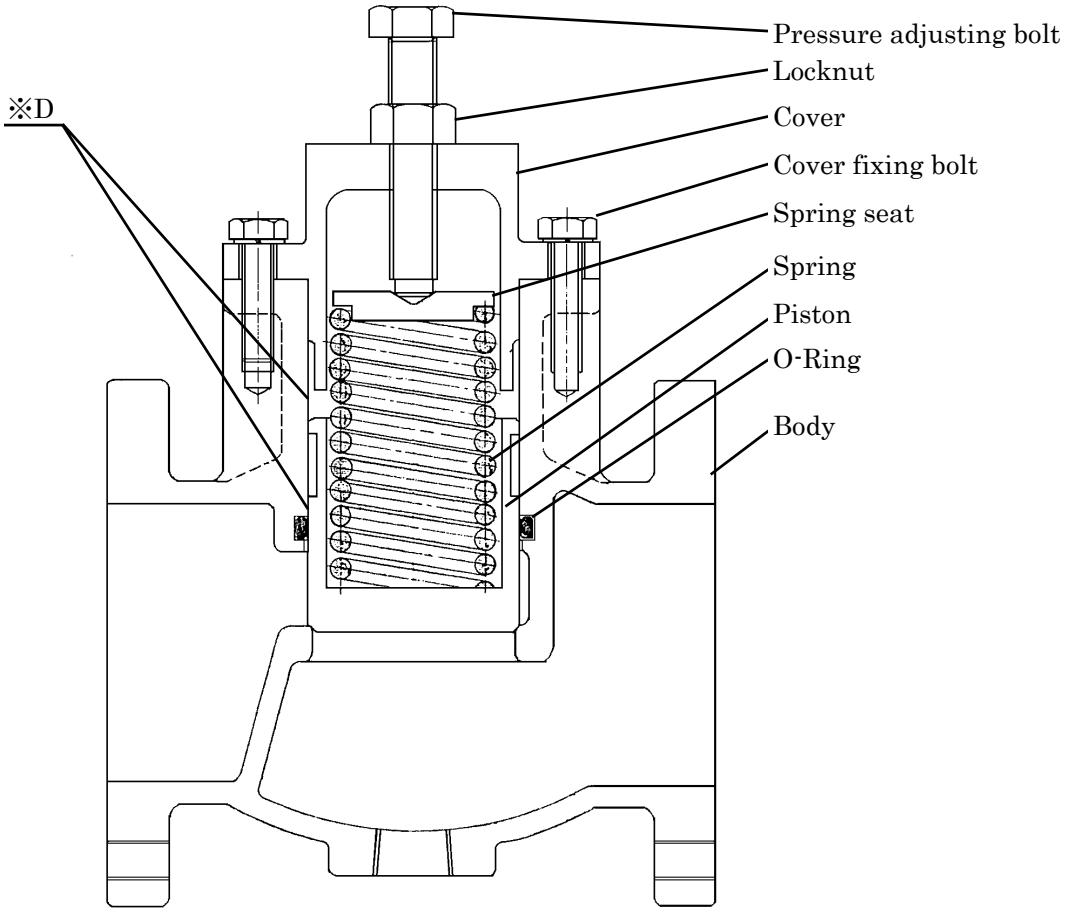

2.2.4 Replacement of pellet assembly of by-pass valve

The by-pass valve fitted on the unit is of flow dividing type. While the unit is used for normal operation, it is not to perform periodical replacement of the Inner pellet assembly, but when such trouble as excessive rise of compressor oil temperature, it becomes necessary to replace it, in accordance with the following procedures.

＜Procedures＞

① First stop the unit and make sure that there is no residual pressure left in the separator receiver tank.

② After checking and confirming that the temperature of compressor oil has become amply low, open drain valves on separator receiver tank and oil cooler to empty compressor oil completely.

③ After having drained oil completely, remove the pellet assembly of by-pass valve and O-ring.

④ Replace the pellet assembly and O-ring by new ones. Install O-ring coated thinly with compressor oil.

⑤ Supply compressor oil through the filler port provided on the receiver tank. (Refer to operation manual.)

⑥ Start operation and check the function of by-pass valve. (It functions well when delivery air temperature will not rise abnormally.)

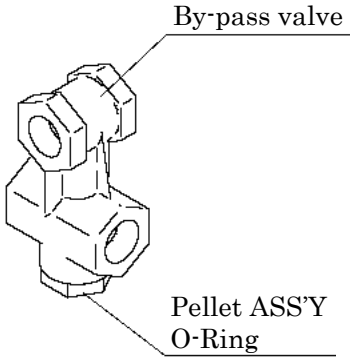

2.2.5 Adjustment of Regulator

CAUTION — ***Operation with compressed air supply port opened is prohibited***

- When adjusting regulator system, install a silencer to the air delivery port and wear earplugs for protection of hearing damage.

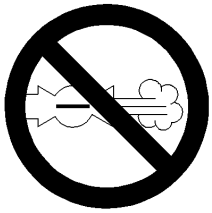

D003

- The speed regulator is already adjusted prior to delivery ex.works. Never change the setting of the regulator by turning bolt and rod recklessly.
- If it is necessary to re-adjust the speed regulator due to overhauling or any trouble, adjust it in accordance with the following procedures.

PDS655S[SD]-4B1,PDSF530S-4B1

＜Adjustment procedures＞

① Adjust the length of rod Ⓑ with the lever (2) of speed regulator (1) contacting portion Ⓐ so that engine RPM can be set at the rated speed of 2,500 min^{-1} (rpm). (Extending the rod length reduces RPM.)

② Adjust the length of rod Ⓒ under unloaded conditions so that engine RPM can be set at the speed of 1,200 min^{-1} (rpm). (Extending rod length reduces RPM.)

③ Set the system by turning the adjusting bolt of pressure regulator (3) so that the speed regulator (1) may function to lower engine RPM when the delivery pressure exceeds 0.7MPa (7.1kgf/cm^2) [In case of PDSF530S, the speed regulator (1) functions to lower RPM when it exceeds 1.05MPa(10.7kgf/cm^2)] (Screwing in the bolt raises the pressure, while loosening the bolt lowers the pressure.)

IMPORTANT

- RPM at unloaded conditions should be set at higher speed than 1,200 min^{-1} (rpm), and if operated lower than 1,200 min^{-1} (rpm), it can cause abnormal vibration to the unit, resulting in damaging coupling and the like.

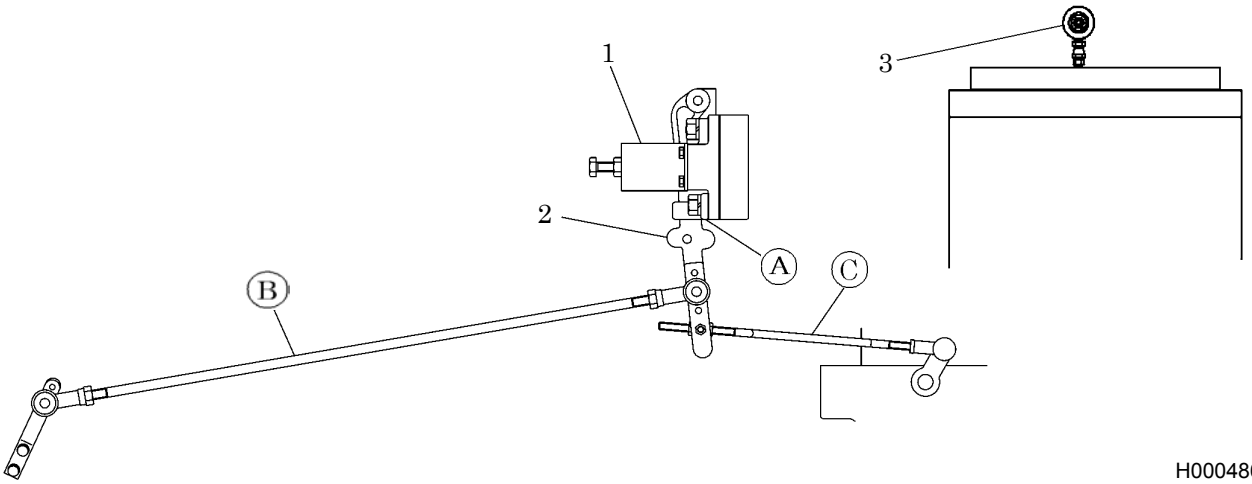

H000486

PDS750S-4B1,PDS655S[SD]-4B2,PDSF530S-4B2

＜Adjustment procedures of speed regulator＞

①Adjust the length of rod Ⓑ with the lever (2) of speed regulator (1) contacting portion Ⓐ so that engine RPM can be set at the rated speed of engine. (Extending the rod length reduces engine speed (RPM).)

Engine rated speed (RPM)

PDS655S[SD]-4B2 PDSF530S-4B2	2,500min^{-1}
PDS750S-4B1	2,100min^{-1}

②Adjust the adjusting bolt (3) under unloaded conditions so that engine RPM can be set at the speed of 1,200min^{-1} (rpm). (Loosening adjusting bolt (3) reduces engine speed (RPM).)

③Set the system by turning the adjusting bolt (5) of pressure regulator (4) so that the speed regulator (1) may function to lower engine RPM when the delivery pressure exceeds 0.7MPa (7.1kgf/cm²) [In case of PDSF530S, the speed regulator (1) functions to lower RPM when it exceeds 1.05MPa(10.7kgf/cm²)] (Screwing in the bolt raises the pressure, while loosening the bolt lowers the pressure.)

IMPORTANT

- RPM at unloaded conditions should be set at higher speed than 1,200 min^{-1} (rpm), and if operated lower than 1,200 min^{-1} (rpm), it can cause abnormal vibration to the unit, resulting in damaging coupling and the like.

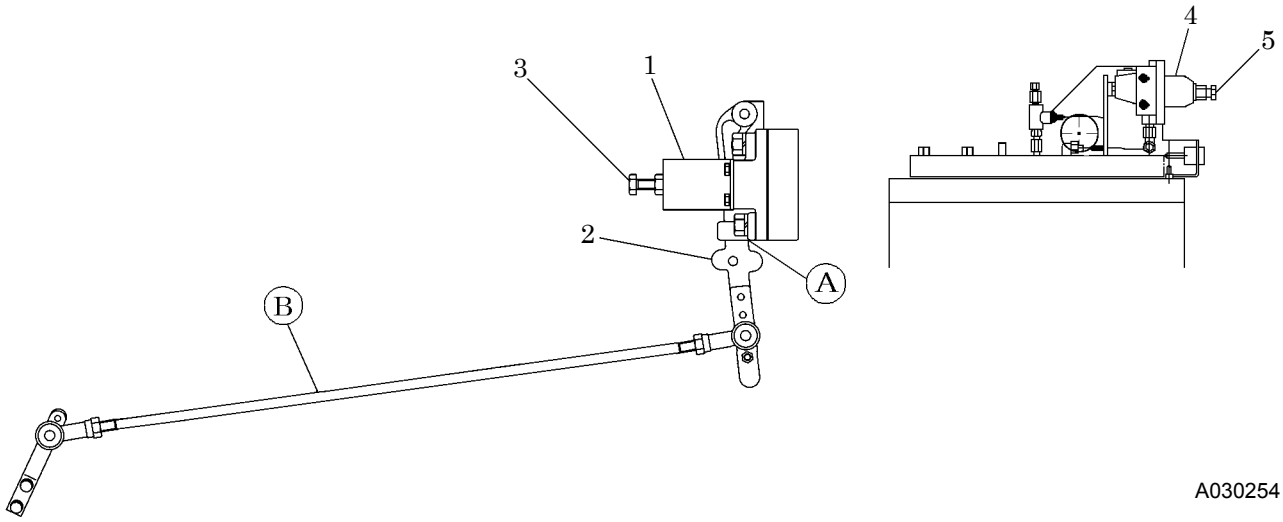

＜Adjustment procedures of unloader regulator＞

① Screw in nut (3) and rod end (4) deep into the shaft (2) of unloader regulator (1) in the same way of tightening double nuts, holding the bolt by one spanner for prevention of turning together.

② Insert the spacer (5) after relieving air pressure, with unloader regulator (1)loaded with air pressure (0.3～1.0 MPa), and also with the shaft (2) touched to the shaft (2).

③ Fix the unloader regulator (1) to the bracket (6) and fasten the bracket (6) temporarily with bolts (7). (To a degree that the bracket (6) may be able to slide.)

④ Fix rod end (4) to the unloader lever (8).

⑤ Tighten the bracket (6) more, pushing it in the arrow direction and retighten the bolts (7) which are temporally fastened. (The unloader valve should be closed fully.) In this time, press the bracket (6) in straight so that the bracket (6) may not be positioned inclined.

⑥ Finally, extract the spacer (5) which is inserted.

⚠ CAUTION

- When the unloader valve has not been fully closed during operation inspection, loosen rod end (4) and nut (3), and insert narrow bar into the hole of shaft (2) and turn the shaft (2) in the rod end loosening direction (In this time, never turn the shaft (2) more than 1 time. Turning more times than 1 turn could cause the rod end (4) to coming off.) Then later the rod end (4) and nut (3) should be fixed. Even in spite of the attempt, if it could not be fully closed, it is necessary to re-adjust the fixing position of the bracket (6) in the above way.

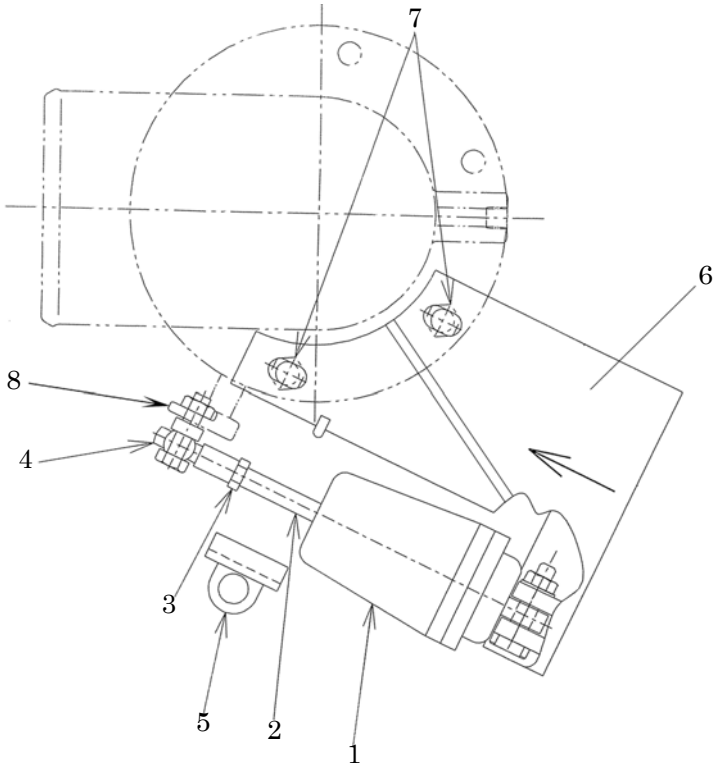

A030255

2.3 Values of Various Adjustments of Engine

Item	unit	PDS655S[SD]-4B1 PDSF530S-4B1	PDS655S[SD]-4B2 PDSF530S-4B2	PDS750S-4B1
Engine model		HINO J08CR-HOCA	HINO J08CV-HOCC	HINO J08CUT-HOCB
Tightening torque of head bolts	N・m	After tightening M12 bolt to 59N・m(6kgf・m), retighten it further 90° and once again further 90°. Tighten M10 bolt by 59N・m(6kgf・m).		
Valve clearance	Mm	Air intake 0.30 Discharge 0.45 (in cold season)		
Firing order		1-4-2-6-3-5		
Injection timing (BTDC)	°	15	10	9
Nozzle injection pressure	MPa (kgf/cm^2)	First valve opening pressure 16.7(170)		
		Second valve opening pressure 21.6(220)		
Compression (RPM: 280min^{-1})	MPa (kgf/cm^2)	3.4～3.6 (35～37)		
Thermostat opening temperature	℃	76.5		
Full open temperature	℃	90		

3. Electric System

3.1 Location of electric appliances

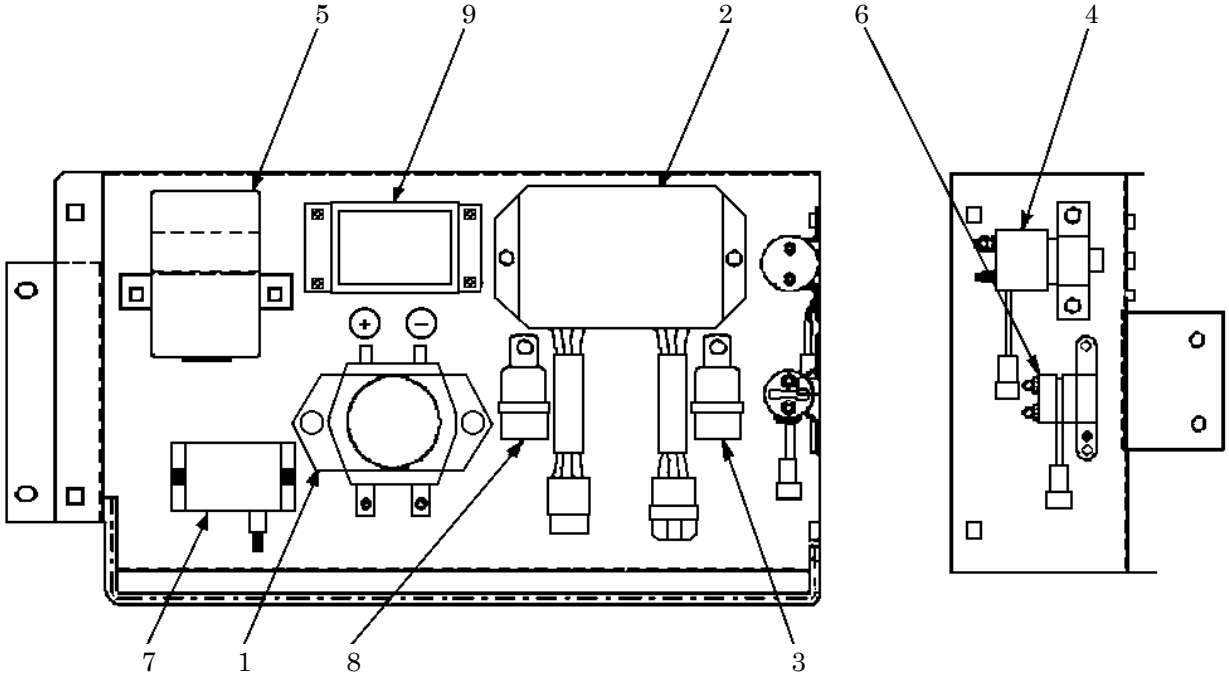

1.Battery relay
2.Engine controller
3.Solenoid relay
4.Starter relay
5.Glow timer
6.Heater relay
7.Discharge air temp. switch
(Discharge air temp. thermistor amplifier)
8.Air bleeding pump relay
9.Engine speed down controller

3.2 Engine controller

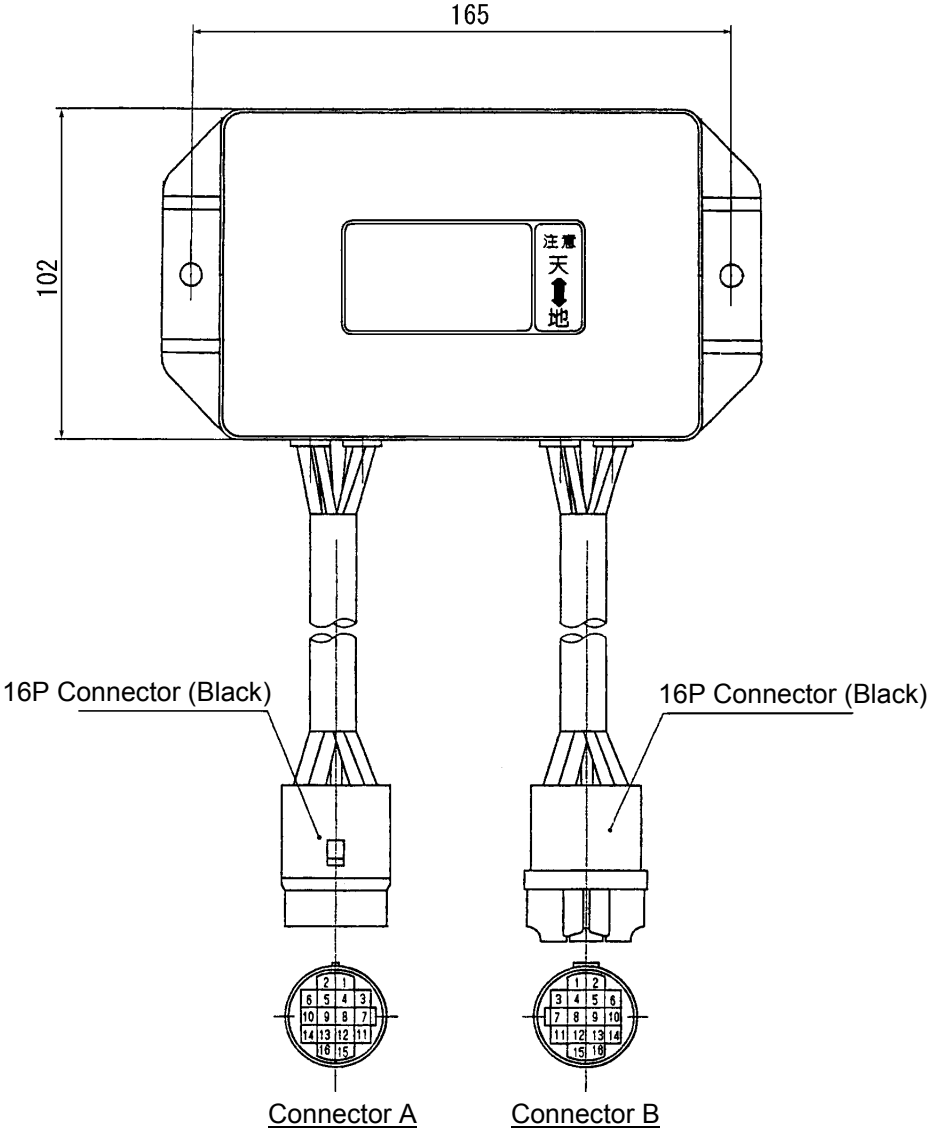

(1) Specifications

Rated voltage	DC24V

(2) List of functions

Pin No.		Line color	Connection	Remark
Connector A	A-1	Y/B	Alternator N terminal	Power generating signal input (detection of alternator RPM)
	A-2	B	Earth	Main grounding connection of engine controller.
	A-3	B/R	Starter relay E terminal	Starter relay function control circuit When starter switch is "ON", it is electrically connected, and it is disconnected when exceeding alternator RPM 970min^{-1}.
	A-5	Y/G	Discharge air temperature lamp	When B-3 terminal is electrically "OFF". Delivery air temperature lamp lights.
	A-6	B/W	Starter relay C terminal	For detection of voltage generated by starter motor revolution moment. For prevention of engine starting again while it is running due to starter motor moment, the starter motor is kept from starting for 3 seconds even after starter switch is placed at "START" position again.
	※1 A-7	B/Y	Starter switch C terminal	For detection of start signal.
	A-8	R/B	15A Fuse	Power supply for engine controller.
	A-12	L/R	Through emergency stop button to solenoid relay No.4 terminal	Functioning control circuit of solenoid relay. When starter switch is "ON", it is electrically supplied. When starter switch is "OFF" or when emergency stop circuit functions, it is electrically disconnected.
	A-13	W/G	Battery relay	Exciting current is outputted to battery relay.
	A-14	R/B	10A Fuse (Starter switch ACC terminal)	At start, starter switch is switched "ON" to apply battery voltage to engine controller and output current from A-12 and A-13. When starter switch is switched "OFF", it is electrically disconnected to cut the current output to solenoid relay from A-12 thus to stop engine.
Connector B	B-3	G	Discharge air temperature switch No.1 terminal	During normal operation, it is electrically supplied. When electrically switched "OFF" from delivery air temperature switch, it stops engine as emergency stop.
	B-4	B	Earth	When emergency stop circuit connection terminal is electrically "OFF", engine stops as emergency stop.
	B-7	G/Y	Compressor oil filter switch	During normal operation, it is not electrically supplied. When compressor oil filer switch is "ON", it is electrically supplied, and switch B-14 terminal contact to "ON".
	B-9	G/L	Coolant temperature switch	During normal operation it is electrically supplied When cooling water temperature switch is "OFF", it is electrically disconnected, and engine stops as emergency stop. ●Set temperature for emergency stop function: higher than 102℃.
	B-10	G/R	Engine oil pressure switch	During normal operation it is electrically supplied. When engine oil pressure switch is "OFF", it is electrically disconnected, and engine stops as emergency stop. ●Set pressure for emergency stop function: less than 0.15MPa (1.5kgf/cm^2)
	B-11	Y/R	Engine oil pressure lamp	When B-10 terminal is electrically "OFF", engine oil pressure lamp glows.
	B-12	Y/L	Coolant temperature lamp	When B-9 terminal is electrically "OFF", cooling water lamp glows.
	B-14	Y/W	Compressor oil filter lamp	When B-7 terminal is electrically "ON", compressor oil filter lamp glows.
	B-16	L/G	NIL	

※1 : After start signal is detected by A-7 terminal, 20 seconds later it is possible to detect abnormality.

3.3 Glow timer

(1) Glow time characteristic

Time of preheating lighting up (t1)	Less than 0℃ of coolant temperature	5 sec
	More than 0℃ of coolant temperature	1 sec
※1 preheating time (t2)		8.5 sec
※1 after glowing time (t3)		90 sec

※1 : Perform preheating and after-glow operation when coolant temperature is less than 0℃.

(2) List of functions

Pin No.	Line color	Connection	Remark
G2	B/Y	Starter switch C terminal	Detection of start signal.
M	R/B	10A Fuse	Power supply for heater relay excitation.
R	L/W	Heater relay SW terminal	Outputting exciting current for heater relay and when preheating, M terminal is connected and it excites heater relay.
L	B/W	Glow lamp	It makes preheating lamp light ON.
TW	L	Coolant temperature sensor for preheating	Detection of water temperature.
N	R/B	10A Fuse	Power supply for glow timer.
E	B	Earth	

(3) Chart of function

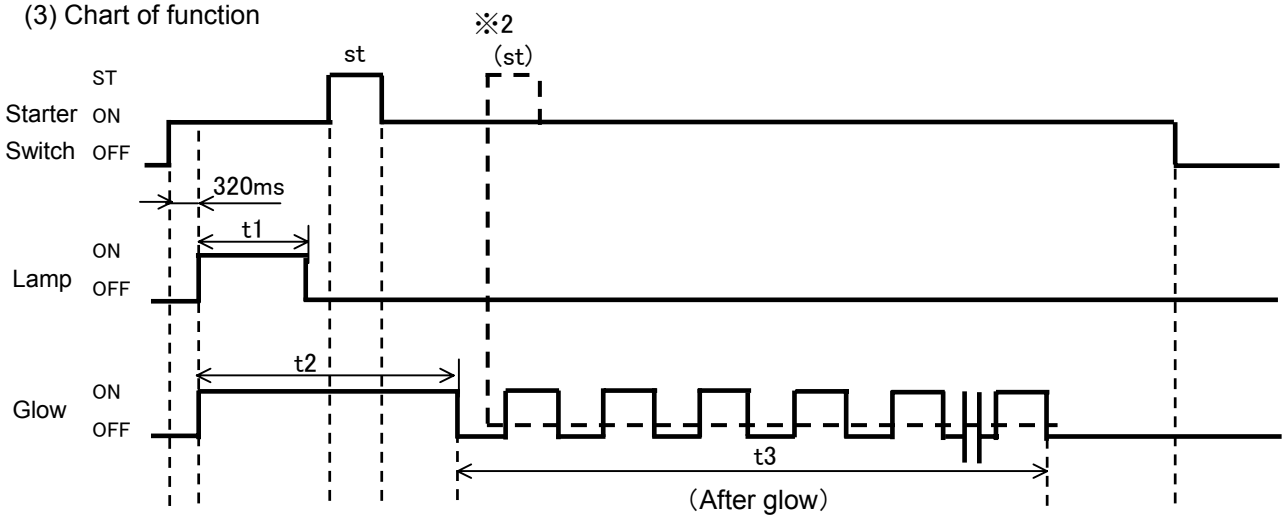

※2 : Do not preheat soon after the lamp lights off. When starting after the preheating time (t2) is finished, after glow will be cancelled.

(4) Coolant temperature sensor (for automatic preheating)

Coolant temperature・Resistance characteristics

Water temp. (℃)	Resistance (k Ω)
-20	16.2
0	6.309
20	2.45
70	0.43

3.4 Discharge air temperature switch (Discharge air temperature thermistor amplifier)

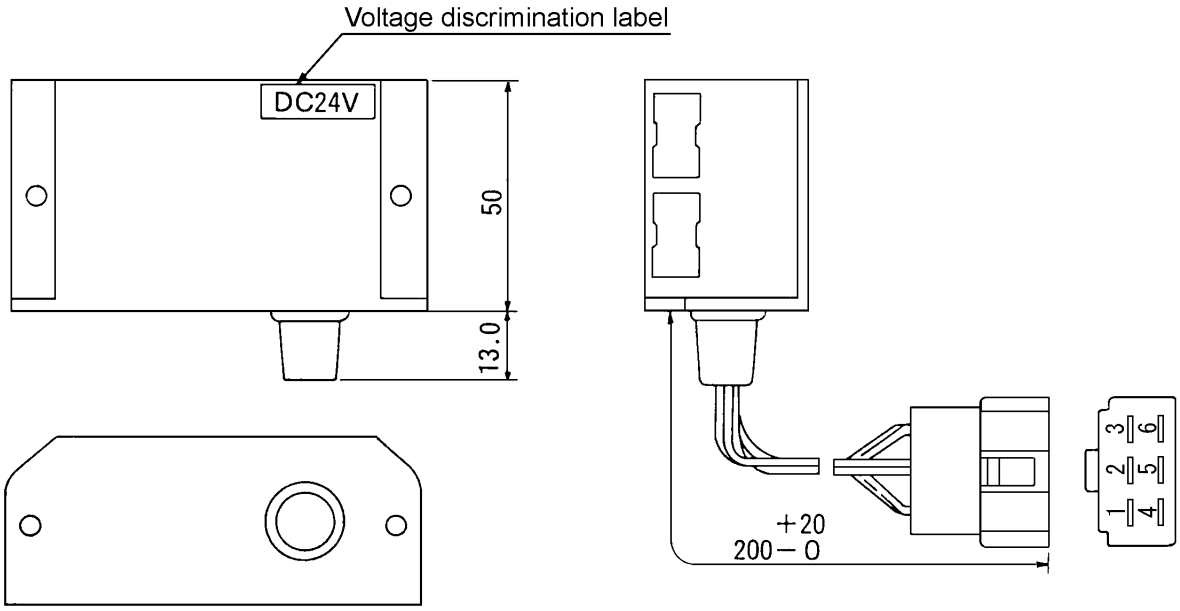

List of functions

Pin No.	Line color	Connection	Remark
1	G	Engine controller B-3 terminal	During normal operation, it is electrically supplied. When delivery air temperature exceeds the set temperature, it is electrically disconnected. ●Set temperature for emergency stop function PDS655S-4B1 ・・・・115℃ PDSF530S-4B1・・・・120℃
2	G/W	Discharge air temperature Sensor	For detection of delivery air temperature.
3	R/B	10A Fuse	Power supply for delivery air temperature switch.
4	B	Earth	Grounding for emergency stop signal.
5	G/W	Discharge air temperature Sensor	For detecting delivery air temperature.
6	B	Earth	

3.5 Alternator

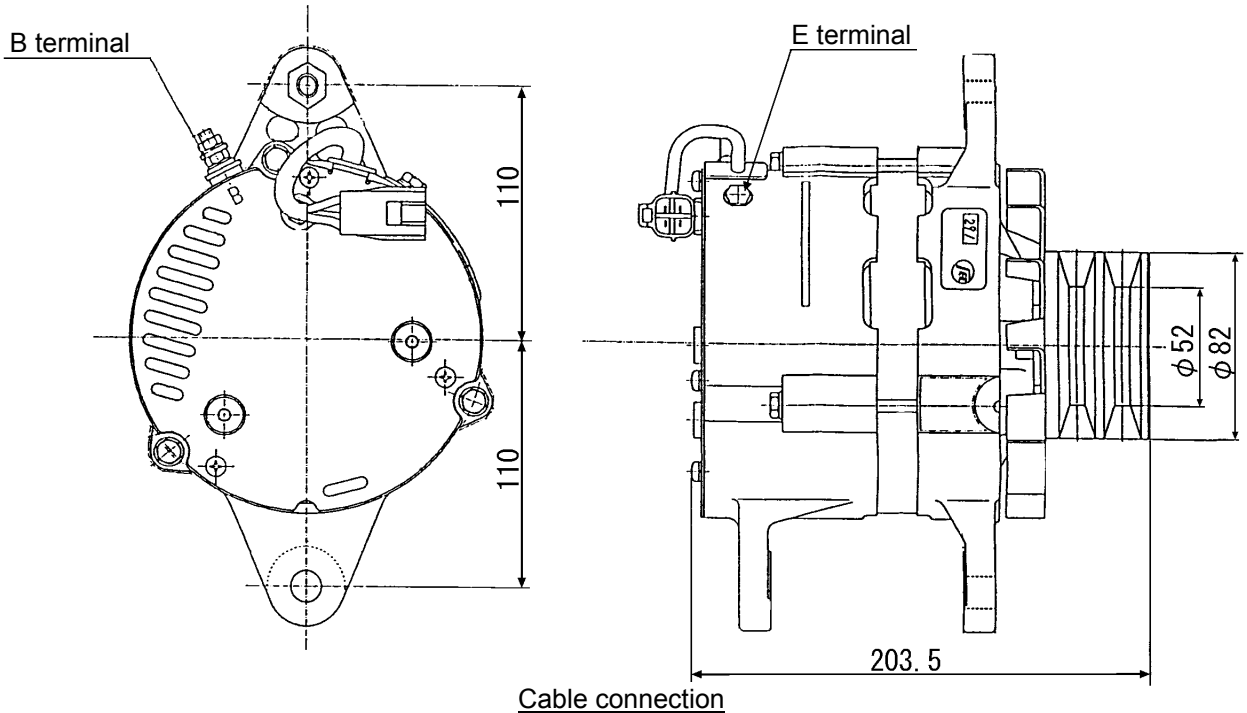

Cable connection

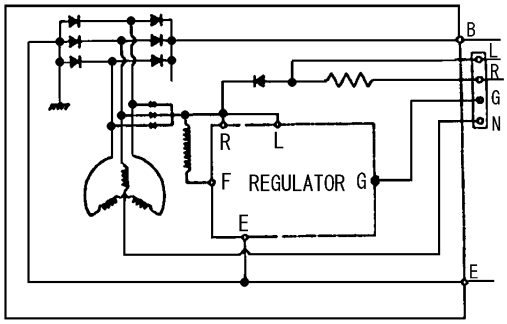

(1) List of functions

Pin No.	Line color	Connection	Remark
R	R/B	10A Fuse	Detection of output voltage of alternator
N	Y/B	Engine controller A-1 terminal	Generator signal output (Alternator revolution speed output)
L	B/W	Charge lamp	Makes lamp light when battery charging is not well done.
G	G/B	Tachometer (with hourmeter) HR terminal	Signal output for hourmeter
B	Y	Battery relay	Power for charging voltage
E	B	Earth	

(2) How to Check

Checking method by measuring battery terminal at full load operation	Normal Value
Measure the battery terminal voltage at full load operation.	28±0.5V

3.6 Starter relay

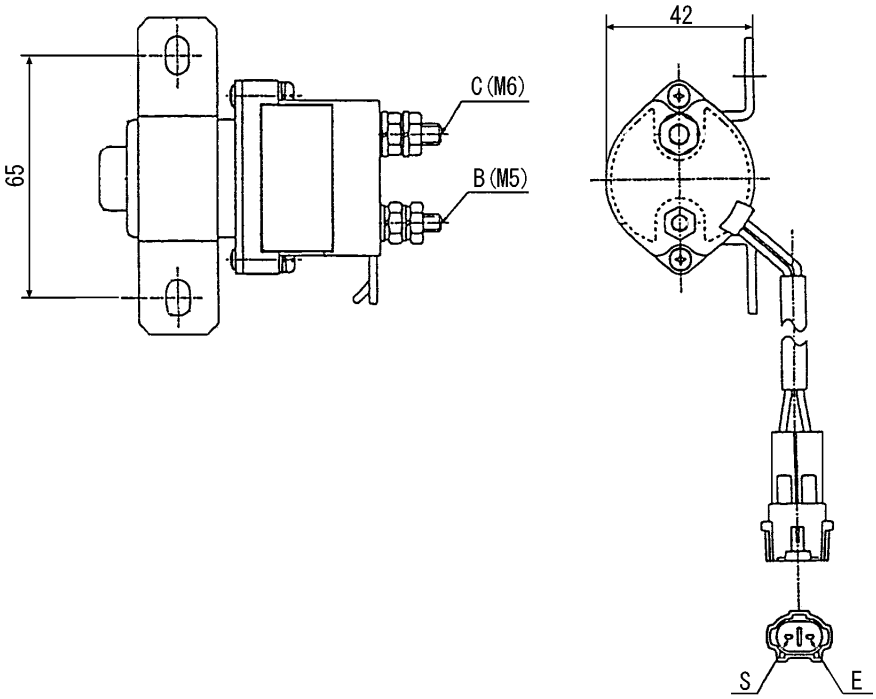

List of functions

Pin No.	Line color	Connection	Remark
S	B/Y	Starter switch C terminal	Input of exciting current.
E	B/R	Engine controller A-3 terminal	Output of exciting current.
B	R	Starter motor B terminal	Power supply for starter motor.
C	B/W	Starter motor C terminal	When starter switch is switched to “START”, it is electrically connected S-E terminals and contact between B-C terminals become “ON”.

3.7 Heater relay

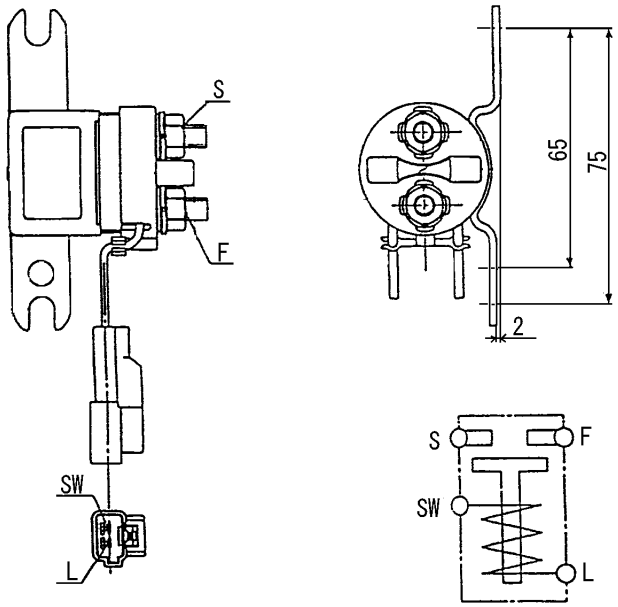

Cable connection

List of functions

Pin No.	Line color	Connection	Remark
SW	L/W	Glow timer R terminal	Input of exciting current.
L	B	Earth	Output of exciting current.
F	L	Battery relay M8 terminal	Power supply for preheating.
S	G	Glow plug	Output of current for preheating.

3.8 Solenoid relay, Air bleeding pump relay

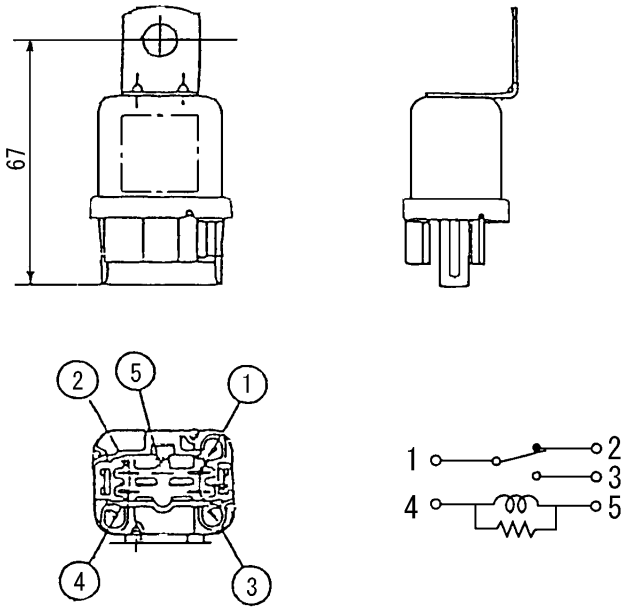

(1) Solenoid relay function list

Pin No.	Line color	Connection	Remark
1	R/W	15A Fuse	Power supply for stop solenoid function.
2	—	NIL	
3	R/L	Stop solenoid	Output of current for stop solenoid function.
4	L/B	Emergency stop button	Input of exciting current.
5	B	Earth	Output of exciting current.

(2) Air bleeding pump relay function list

Pin No.	Line color	Connection	Remark
1	R/G	Starter switch R2 terminal	Power supply for air bleeding pump.
2	—	NIL	
3	Y	Air bleeding pump	Output of current for air bleeding pump.
4	R/G	Starter switch R2 terminal	Input of exciting current.
5	B	Earth	Output of exciting current.

3.9 Thermo-sensor for water temperature gauge and discharge air temperature gauge

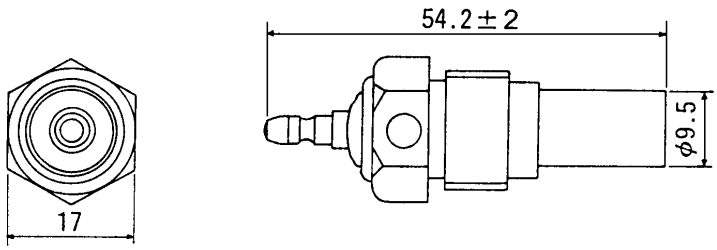

Characteristic of temperature resistance

Water temp. (℃)	Resistance (Ω)	Permissible value
35	670.0	±80.0
80	118.0	±6.0
105	54.5	±2.7
115	42.0	±2.5

3.10 Discharge air temperature sensor (For discharge air temperature switch)

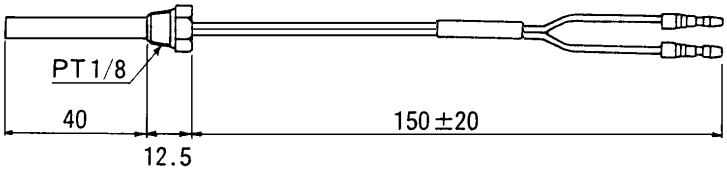

《Note》 Take care not to tighten excessively.
Less than 2N･m(20kgf･cm)

Characteristic of temperature resistance

Water temp. (℃)	Resistance (Ω)	Permissible value
85	1300	±7
95	840	±6
110	560	±5
115	490	±6
120	432	±3

3.11 Tachosensor

Generating voltage between terminals

During unload operation (V)	During full load operation (V)	Remark
3.5～4.5	4.2～5.2	Digital circuit meter ACV range

(The above-mentioned values are generally inclined ones, so they vary upon change of RPM.)

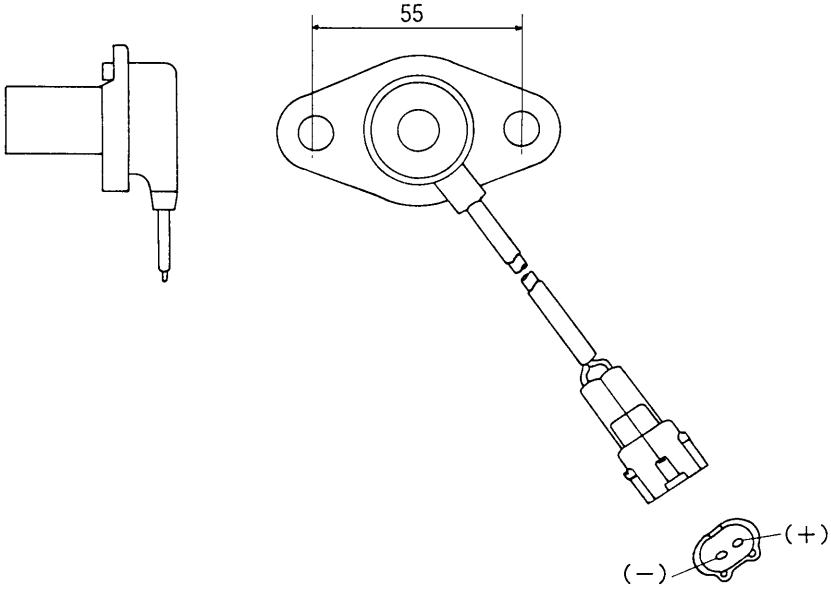

3.12 Engine speed down controller

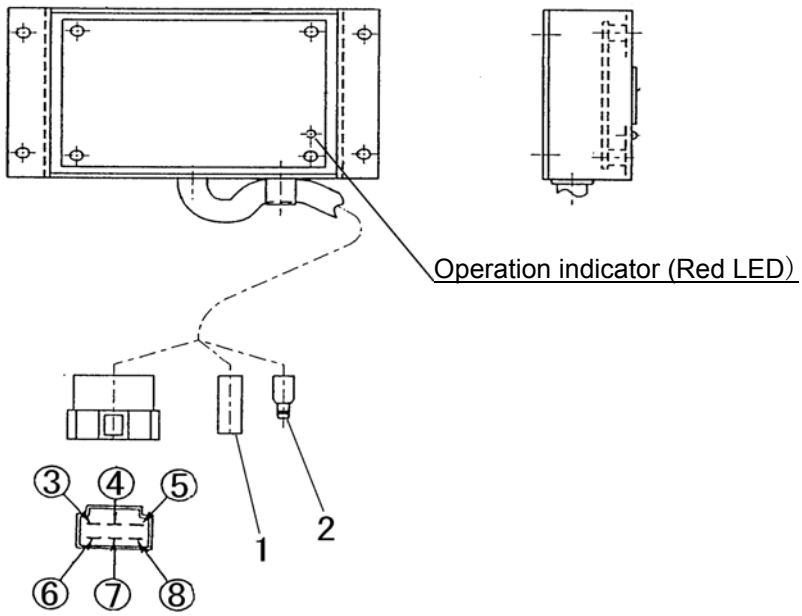

List of functions

Pin No.	Line color	Connection	Remark
(1)	W/R	Tachosensor ＋terminal	For detection of RPM.
(2)	W/B	Tachosensor －terminal	For detection of RPM.
3	R/B	10A Fuse	Power supply
4	B/R	Engine speed down emergency stop lamp	For engine speed down emergency stop lamp It goes on together No.6 when engine RPM drops.
5	L/G	Controller B-16 terminal	Power supply for emergency stop signal.
6	B	Earth	
7	NIL		
8	B	Earth	Outputting of emergency stop signal. It keeps outputting together with No.5 within the range of engine resonant RPM. ※

※ : In case it is operated continuously or about 15 seconds in total within the range of engine resonant RPM, it outputs emergency stop signal about 7 seconds.

Range of resonant RPM	
Low RPM set value	High RPM set value
300±50min^{-1}	900±50min^{-1}

IMPORTANT

- When engine stops by engine speed down controller function, emergency stop lamp continues “ON” till starter switch is switched “OFF”.
- When engine stops by engine speed-down controller function, it enables engine to stop when it is operated for a certain time within the resonant RPM range even if engine is restarted without switching “OFF” the starter switch. (In this time, emergency stop lamp keeps lighting.)

3.13 Tachometer (with hourmeter)

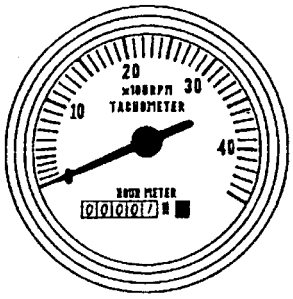

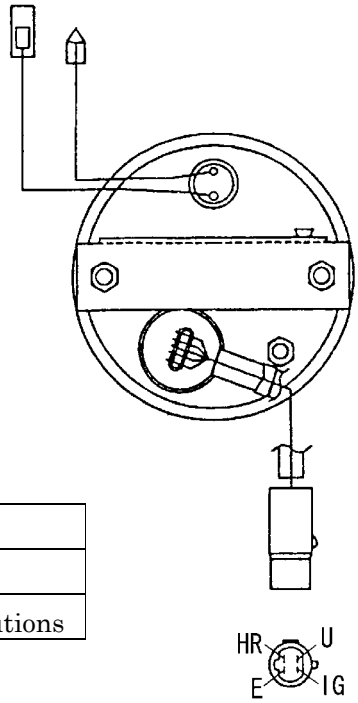

(1) Specifications

Operation voltage	20～30V
Operation temperature	-20～60℃
Revolution ratio (pulse type)	3 pulse per 1 revolutions

(2) List of functions

Pin No.	Line color	Connection	Remark
IG	R/B	10A Fuse	Power supply for tachometer
E	B	Earth	
HR	G/B	Alternator G terminal	Input of hour meter function signal
U	W/R	Tachosensor＋terminal	Detection of engine revolutions
Terminal、Male	R/B	10A Fuse	Power supply for lighting
Terminal、Female	B	Earth	For lighting

3.14 Sending unit

Pointer position	Resistance (Ω)	PDS655S[SD]-4B1/4B2 PDSF530S-4B1/4B2	PDS750S-4B1
		Remaining fuel (L)	Remaining fuel (L)
E	110	30	30
1/2	32.5	107	118
F	3	209	252

3.15 Electromagnetic pump

Rated voltage	24V
Operating current	4A(MAX)
Delivery capacity	2L/min (MIN)

3.16 Stop solenoid

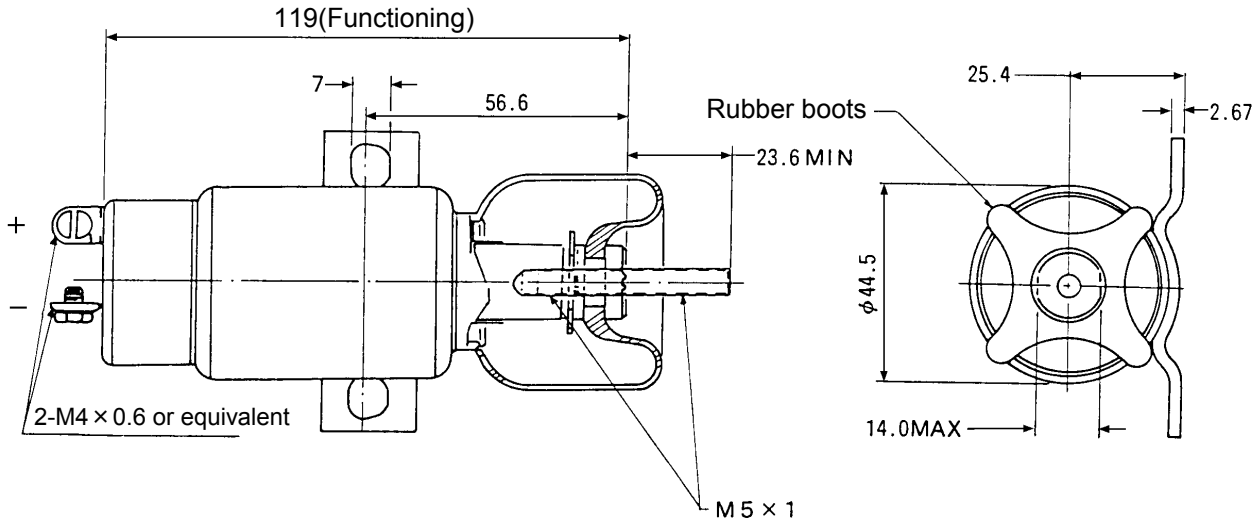

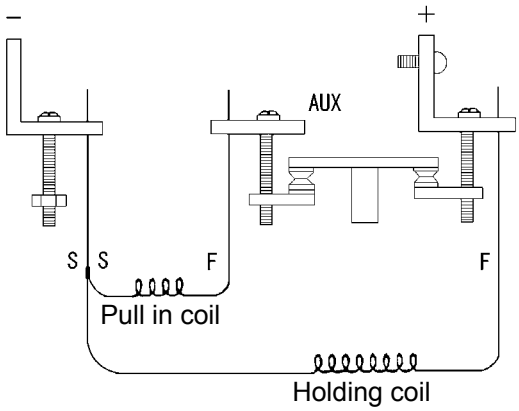

Interior cable connection

(1) Resistance values of winding coil

Item	Resistance (Ω)
Pull in coil	0.96Ω ±10%
Holding coil	48Ω ±10%

(2) Specifications

Item	Specifications	Remark
Rate voltage	24V(DC)	
Pull in current	25A	
Holding Current	0.5A	
Pull in power	8.9kg	Stroke 25mm, rate voltage, at the temperature of 25℃
Holding power	17.8kg	Rated voltage at the temperature of 25℃
Rating	Continuous	
Range of temperature at which unit is used	-40℃～121℃	

IMPORTANT

- Make sure to confirm that the plunger of the stop solenoid functions smoothly and it is pulled in to the stroke end.
- In case that the plunger of the stop solenoid can not be pulled in fully, within about 30 seconds the coil will be burned and lost.

3.17 Wiring Diagram

PDS655S[SD]-4B1/4B2,PDSF530S-4B1/4B2

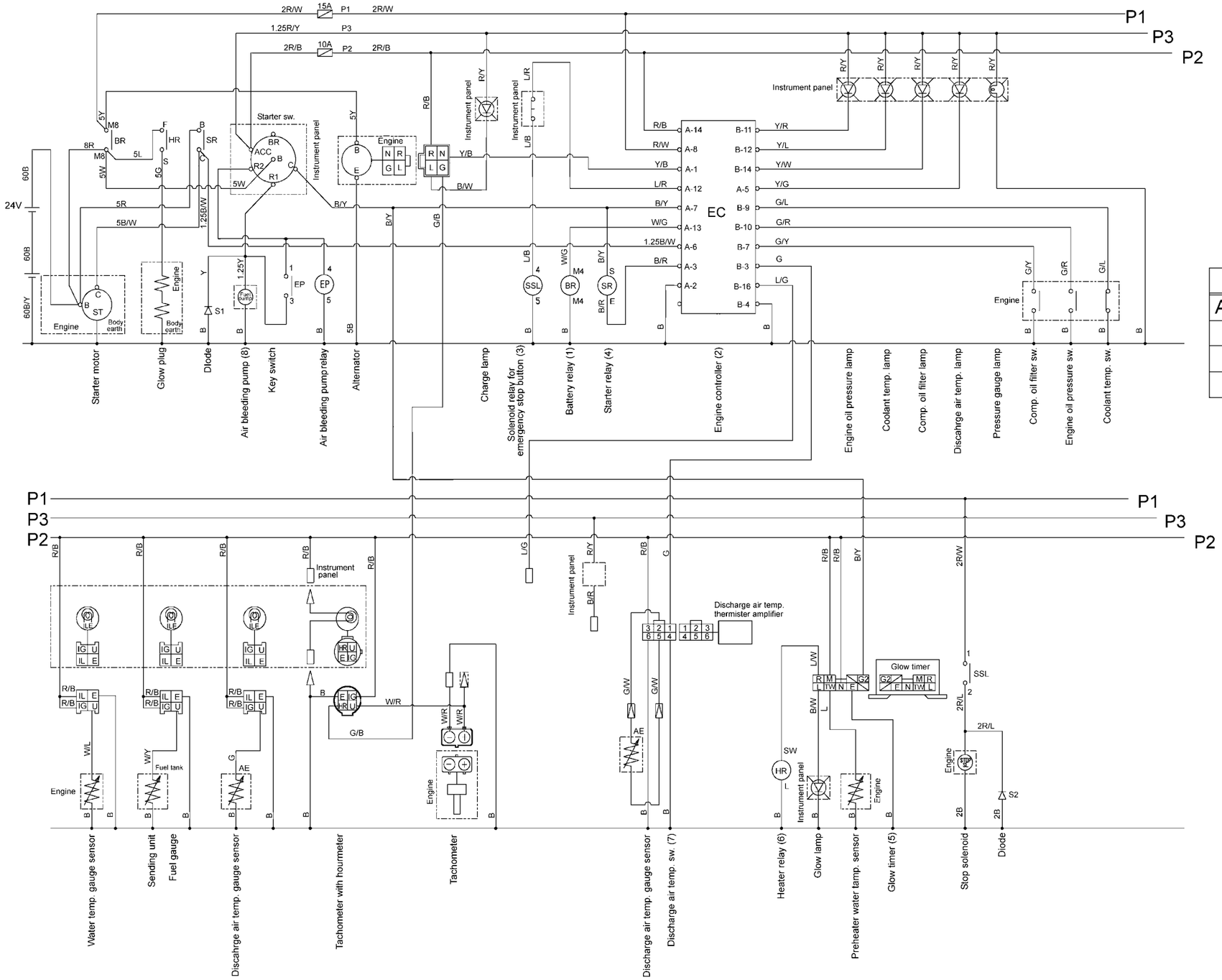

PDS655S-4B1	SER. NO.:68-4B10051～
PDS655S-4B2	SER. NO.:68-4B20051～0242
PDS655SD-4B1	SER. NO.:68A4B10051～
PDS655SD-4B2	SER. NO.:68A4B20051～0242
PDSF530S-4B1	SER. NO.:80-4B10051～
PDSF530S-4B2	SER. NO.:80-4B20051～0088

Starter sw.

	B	ACC	C	BR	R1	R2
Air bleeding	○				○	
OFF	○					
ACC	○	○		○		
ST	○	○	○	○		○

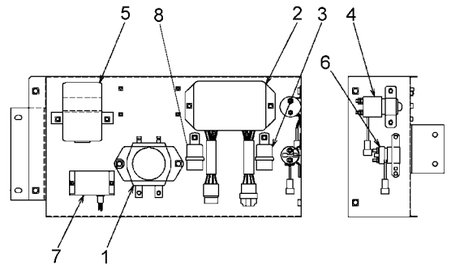

PDS655S-4B1/4B2,PDSF530S-4B1

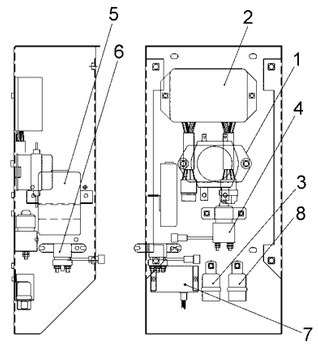

PDS655SD-4B1/4B2

PDS655S[SD]-4B2,PDSF530S-4B2

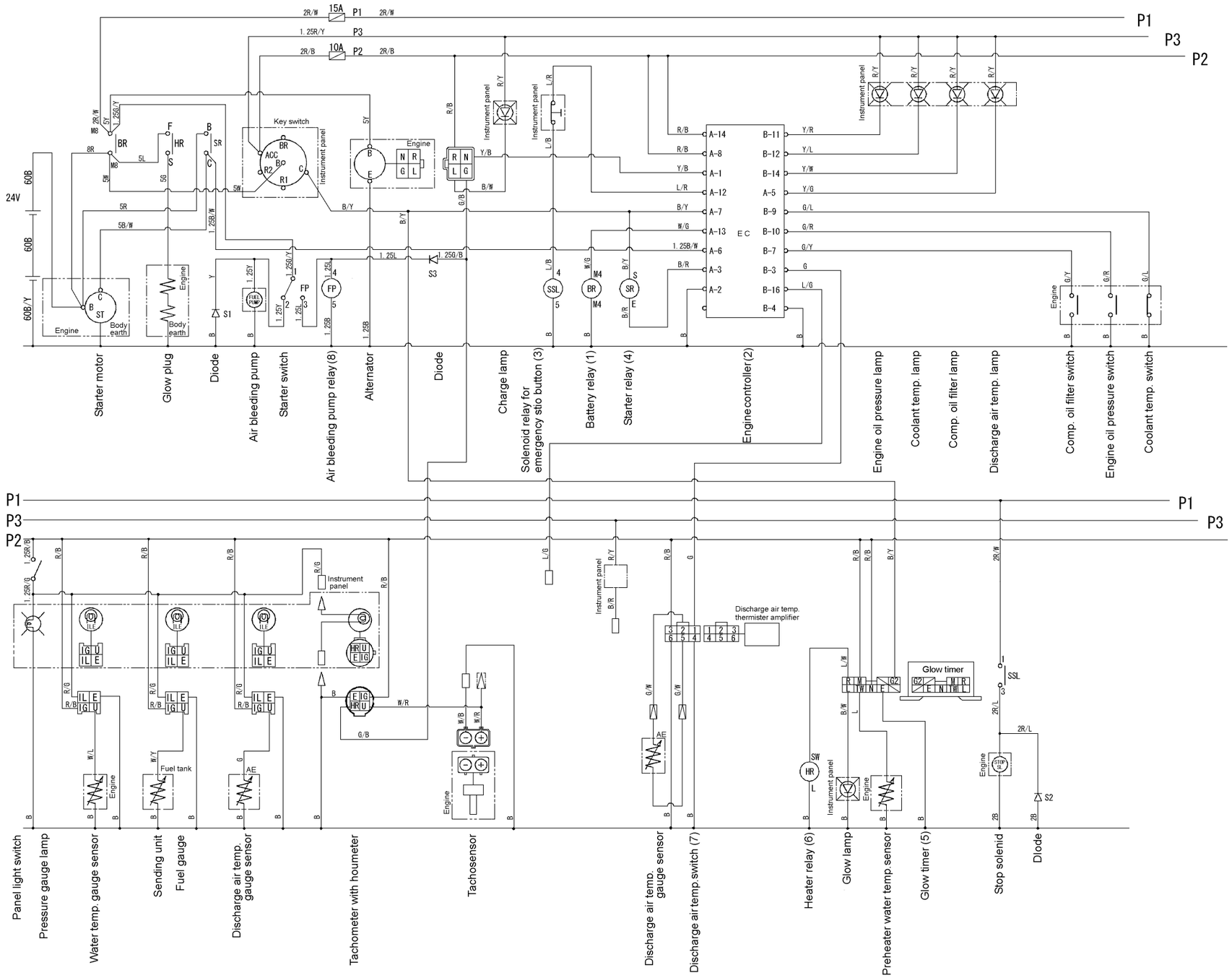

PDS655S-4B2	SER. NO.:68-4B20243～0280
PDS655SD-4B2	SER. NO.:68A4B20243～0280
PDSF530S-4B2	SER. NO.:80-4B20089～0111

Starter sw.

	B	ACC	C	BR	R1	R2
OFF	○					
ACC	○	○		○		
ST	○	○	○	○		○

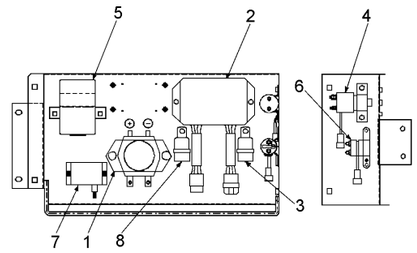

PDS655S-4B2,PDSF530S-4B2

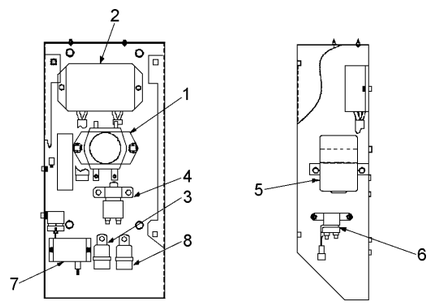

PDS655SD-4B2

PDS750S-4B1,PDS655S[SD]-4B2,PDSF530S-4B2

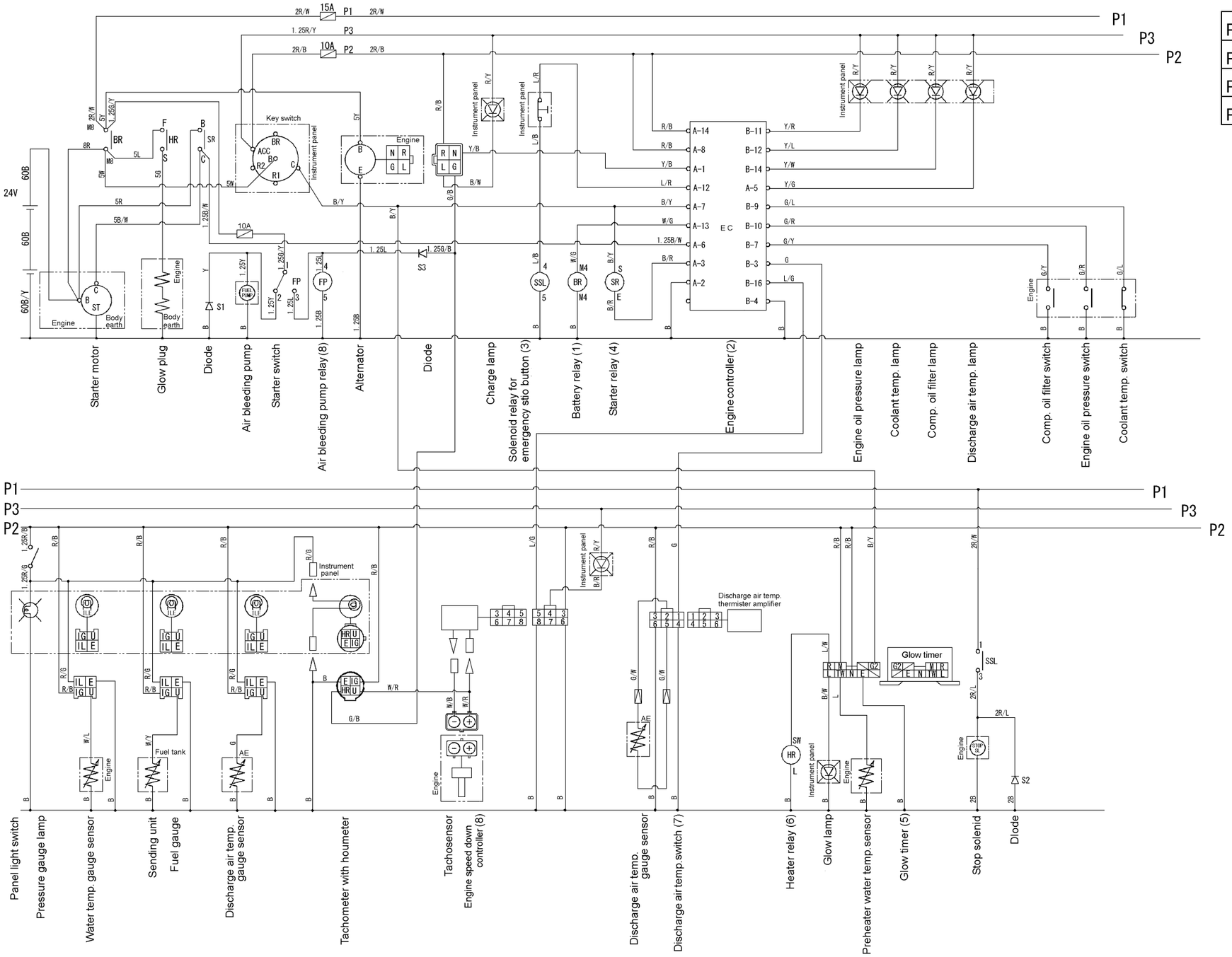

PDS750S-4B1	SER. NO.:64-4B10051～
PDS655S-4B2	SER. NO.:68-4B20281～
PDS655SD-4B2	SER. NO.:68A4B20281～
PDSF530S-4B2	SER. NO.:80-4B20112～

Starter sw.

	B	ACC	C	BR	R1	R2
OFF	○					
ACC	○	○		○		
ST	○	○	○	○		○

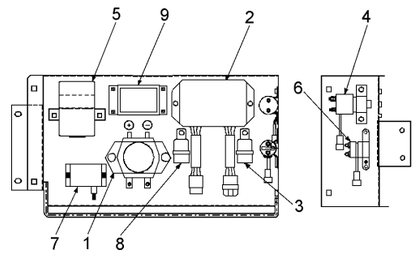

PDS750S-4B1,PDS655S-4B2,PDSF530S-4B2

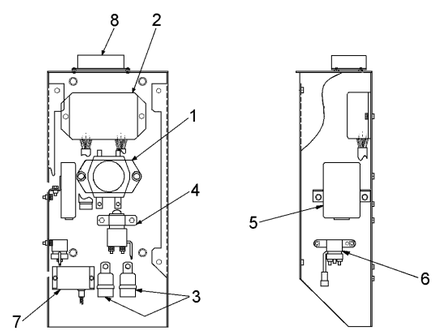

PDS655SD-4B2

4. References

4.1 Fuel consumption

Item		PDS655S[SD]-4B1/4B2 PDSF530S-4B1/4B2	PDS750S-4B1
No load	(L/h)	10.0	14.0
50% load	(L/h)	17.5	19.0
70% load	(L/h)	22.0	27.0
Full load	(L/h)	32.0	37.6

4.2 Noise level

Item	PDS655S[SD]-4B1/4B2 PDSF530S-4B1/4B2	PDS750S-4B1
Low noise level required	Low	Low
Full load [Sound power level in decibels (dB)]	102	102
Full load [Sound pressure level (distance at 7 m in 4 directions)]	※ 73	※ 73

※ : Sound pressure level (at average distance of 7m) is calculated and converted based on acoustic power level.

4.3 Piping Diagram

PDS655S-4B1

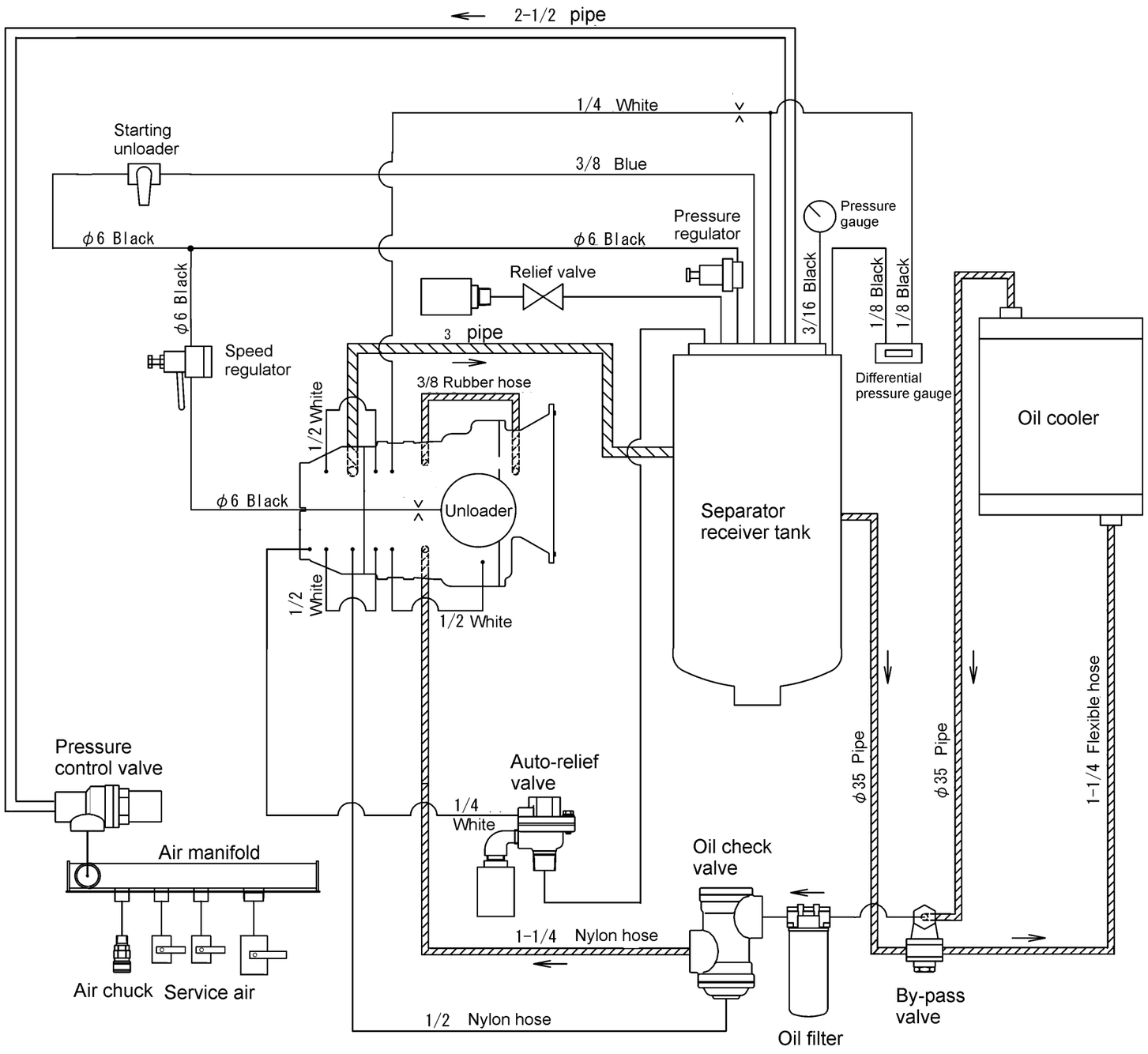

A010057E

PDS655S-4B2

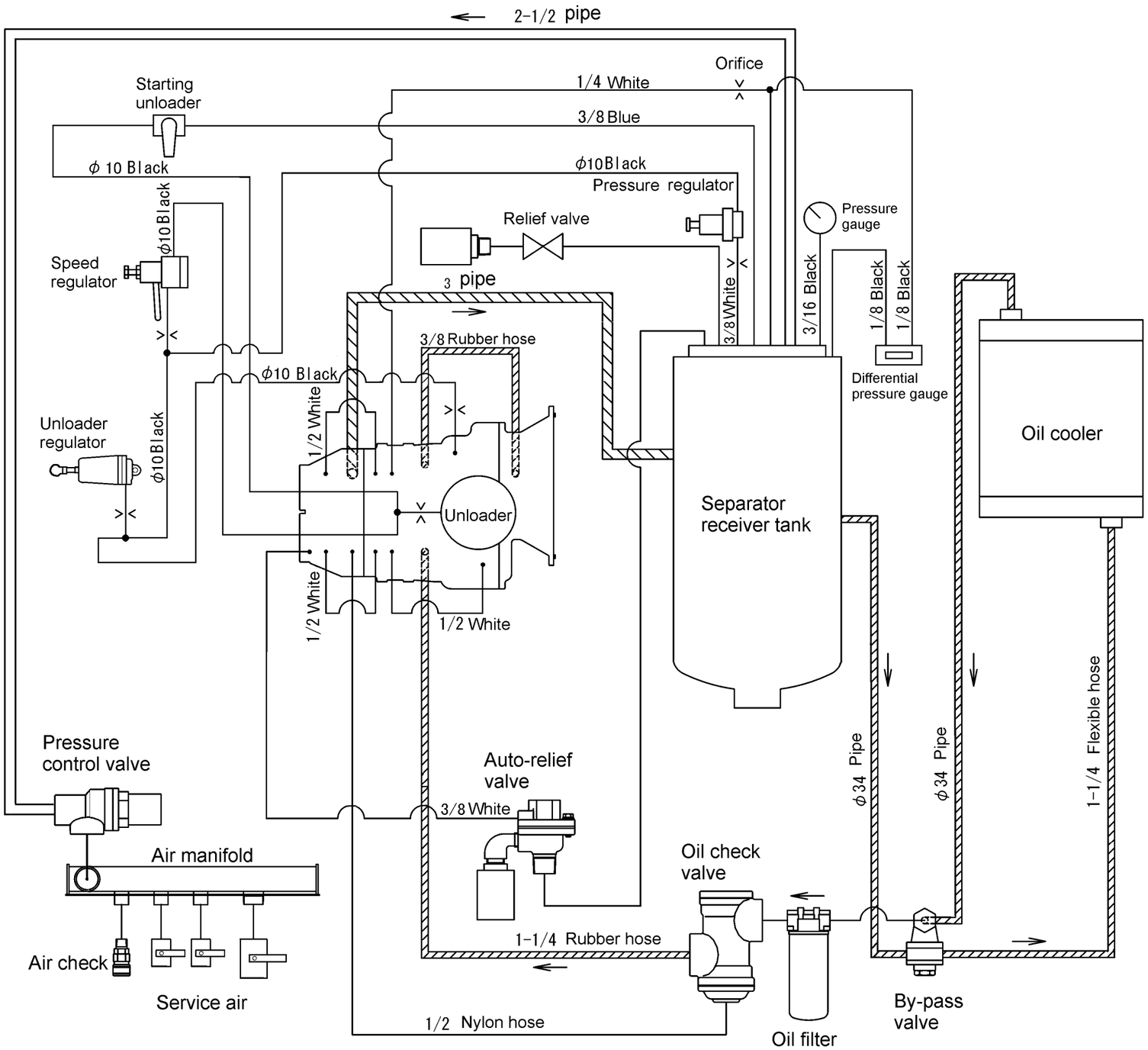

A020286-1

PDS655SD-4B1 (Dry air type)

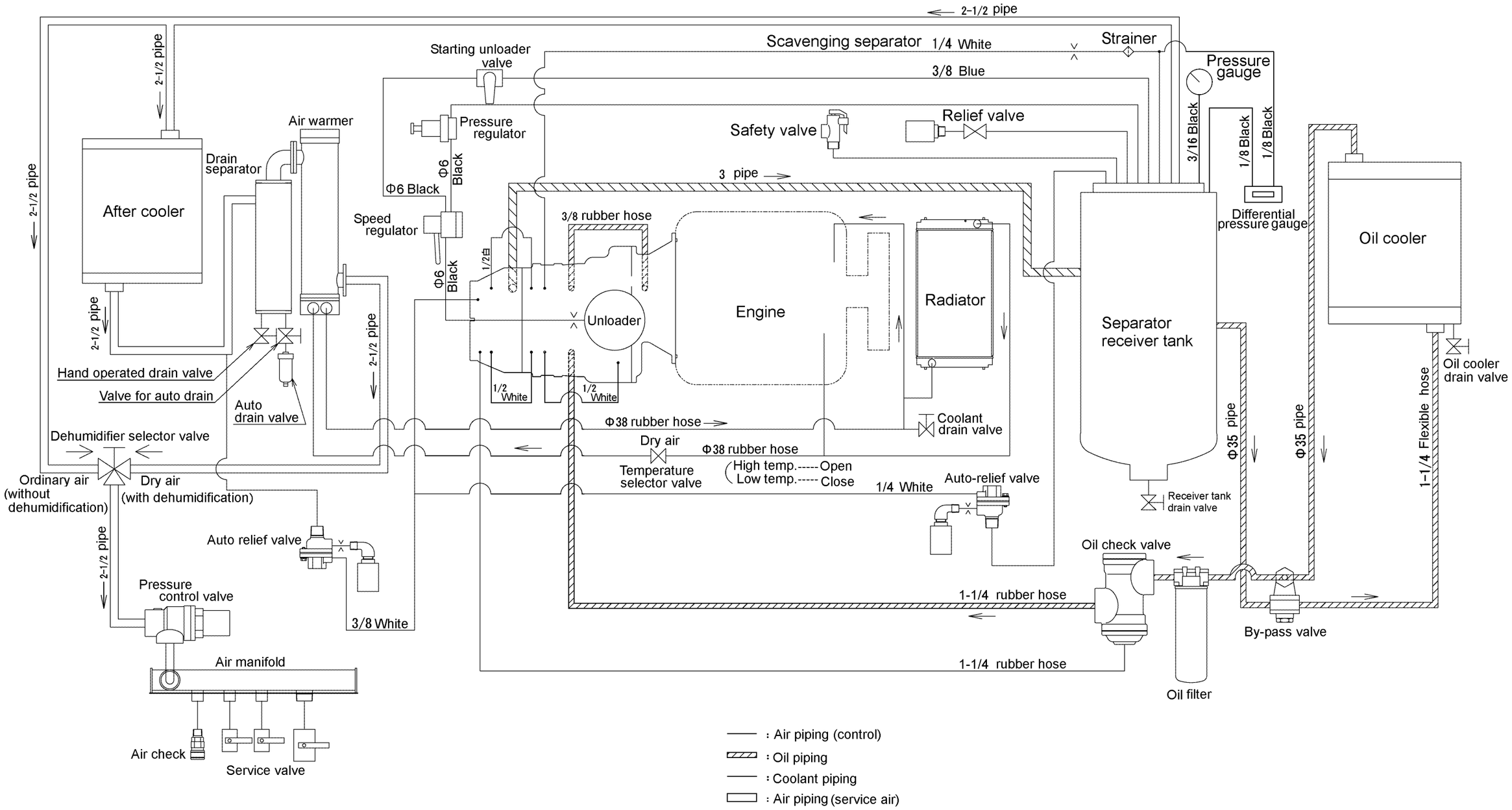

PDS655SD-4B2 (Dry air type)

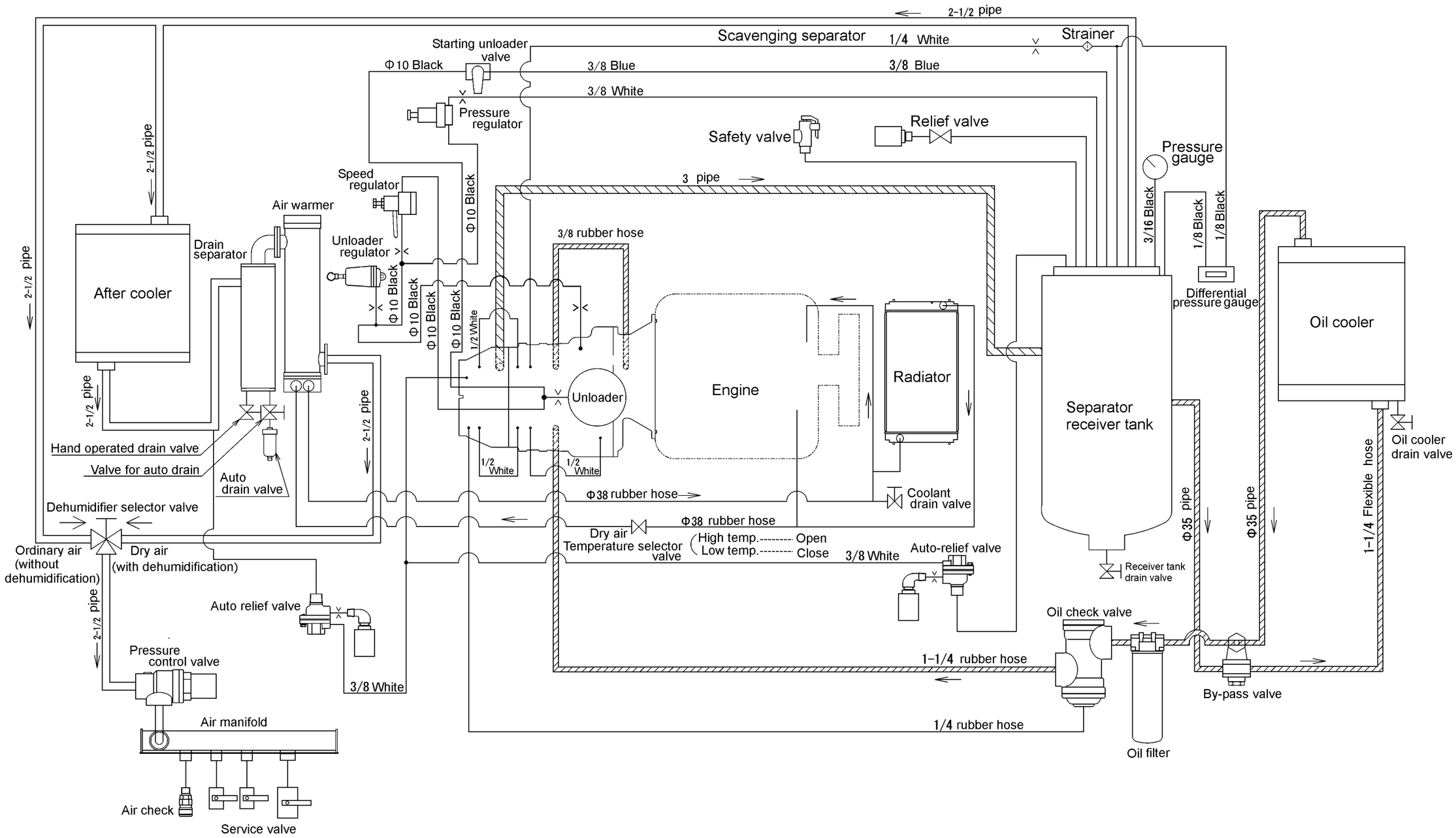

A020288E-1

PDSF530S-4B1

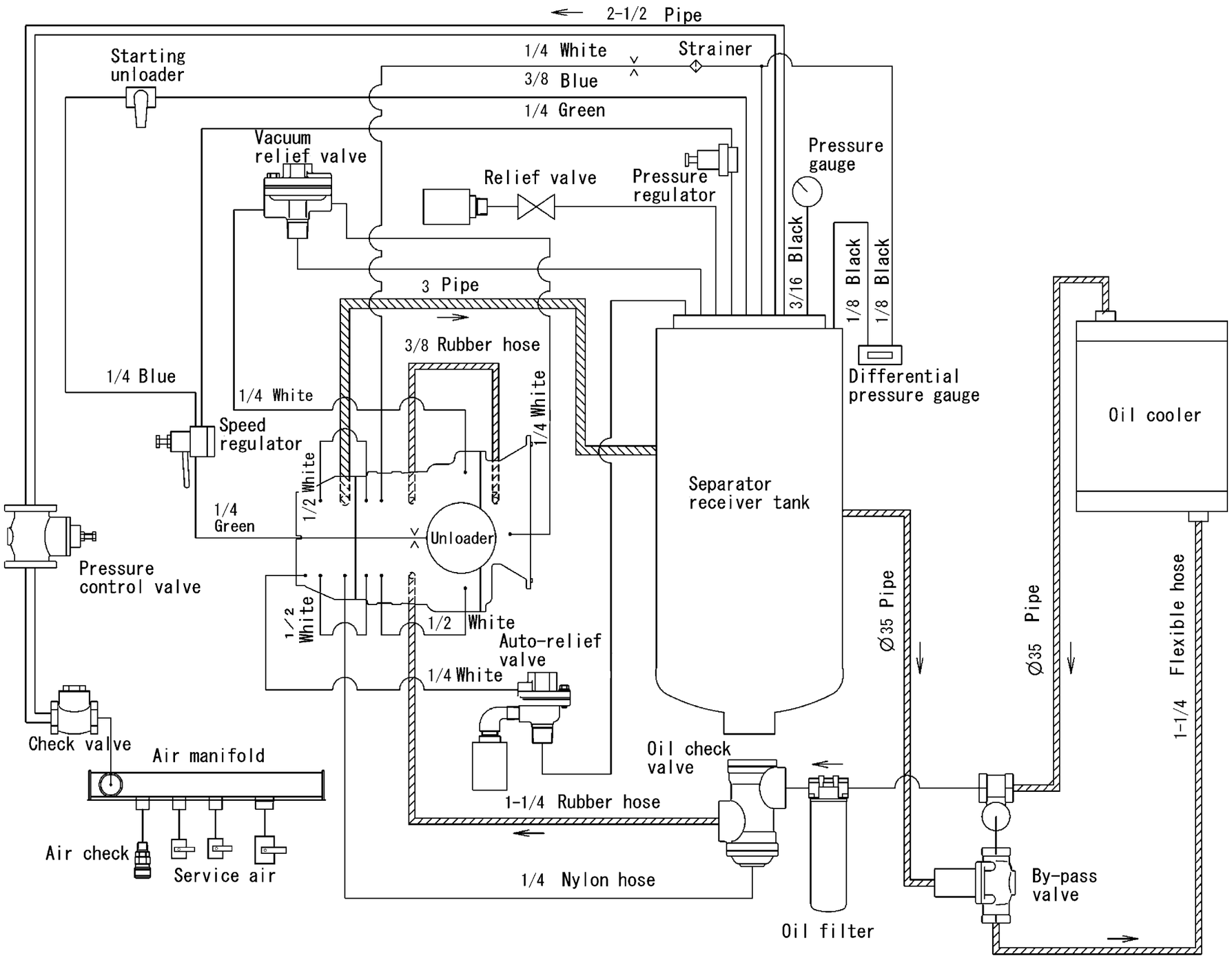

PDSF530S-4B2

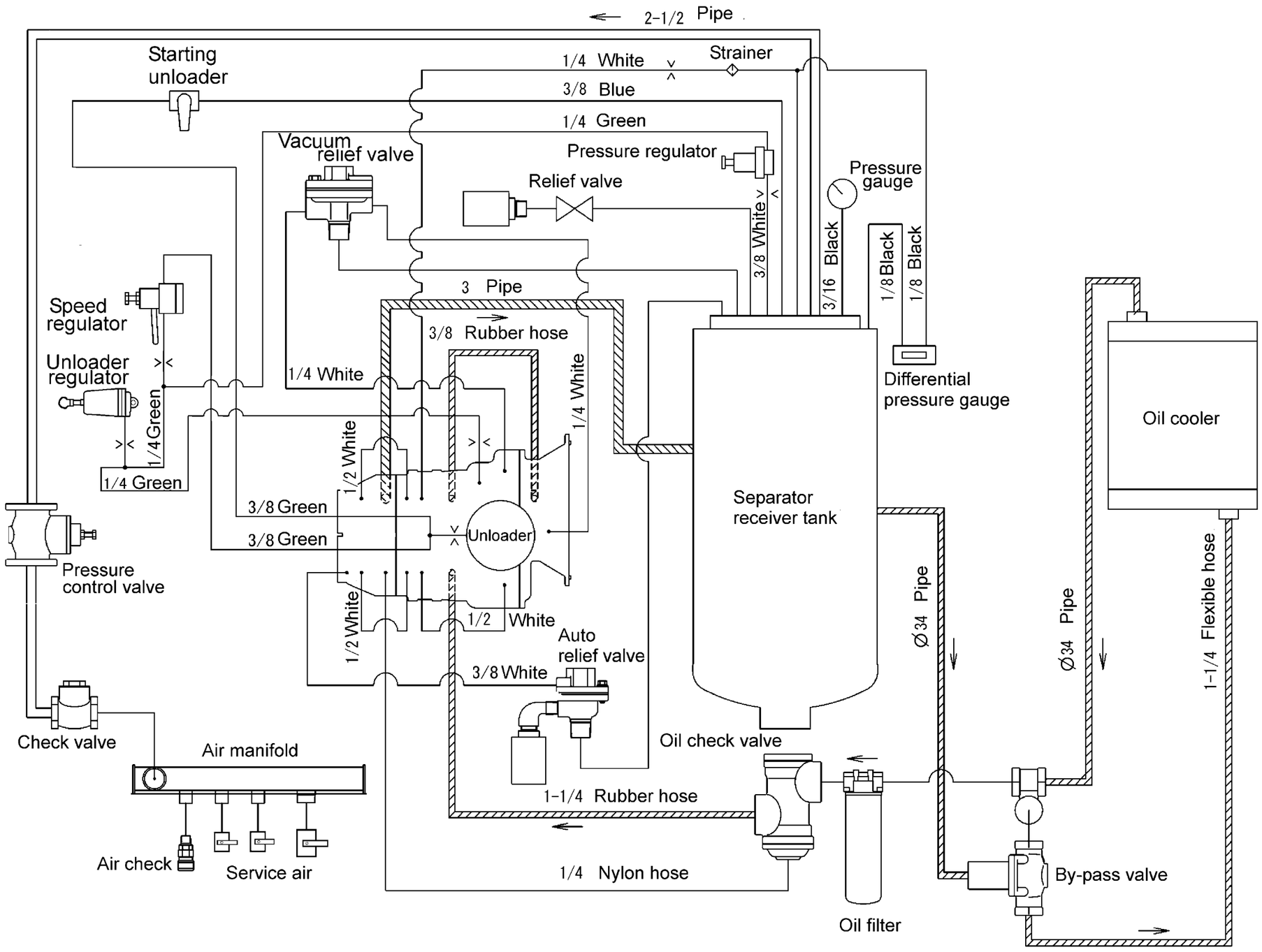

A020287E-1

PDSF530S-4B2 (Dry air type)

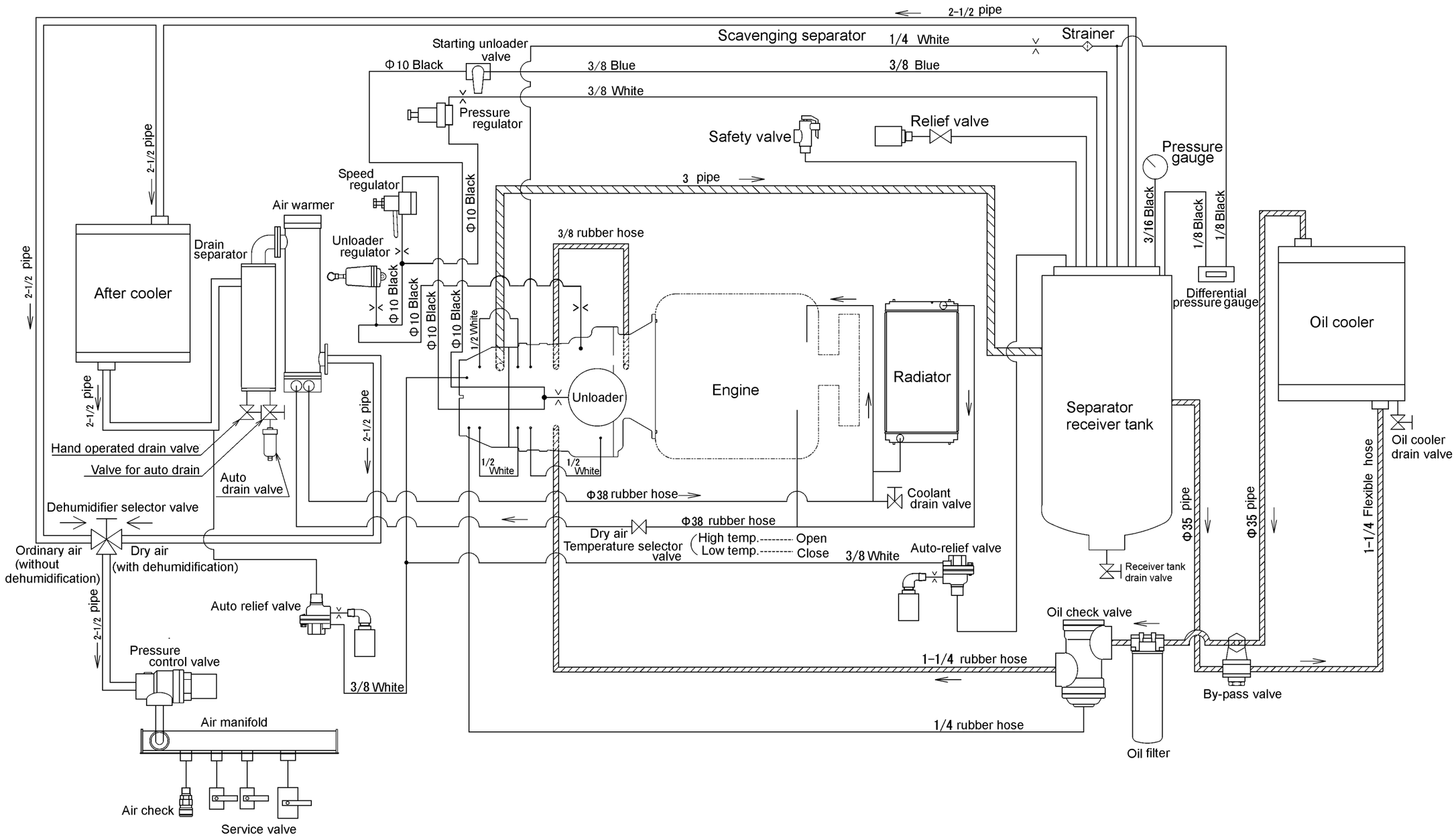

A020288E-1

PDS750S-4B1

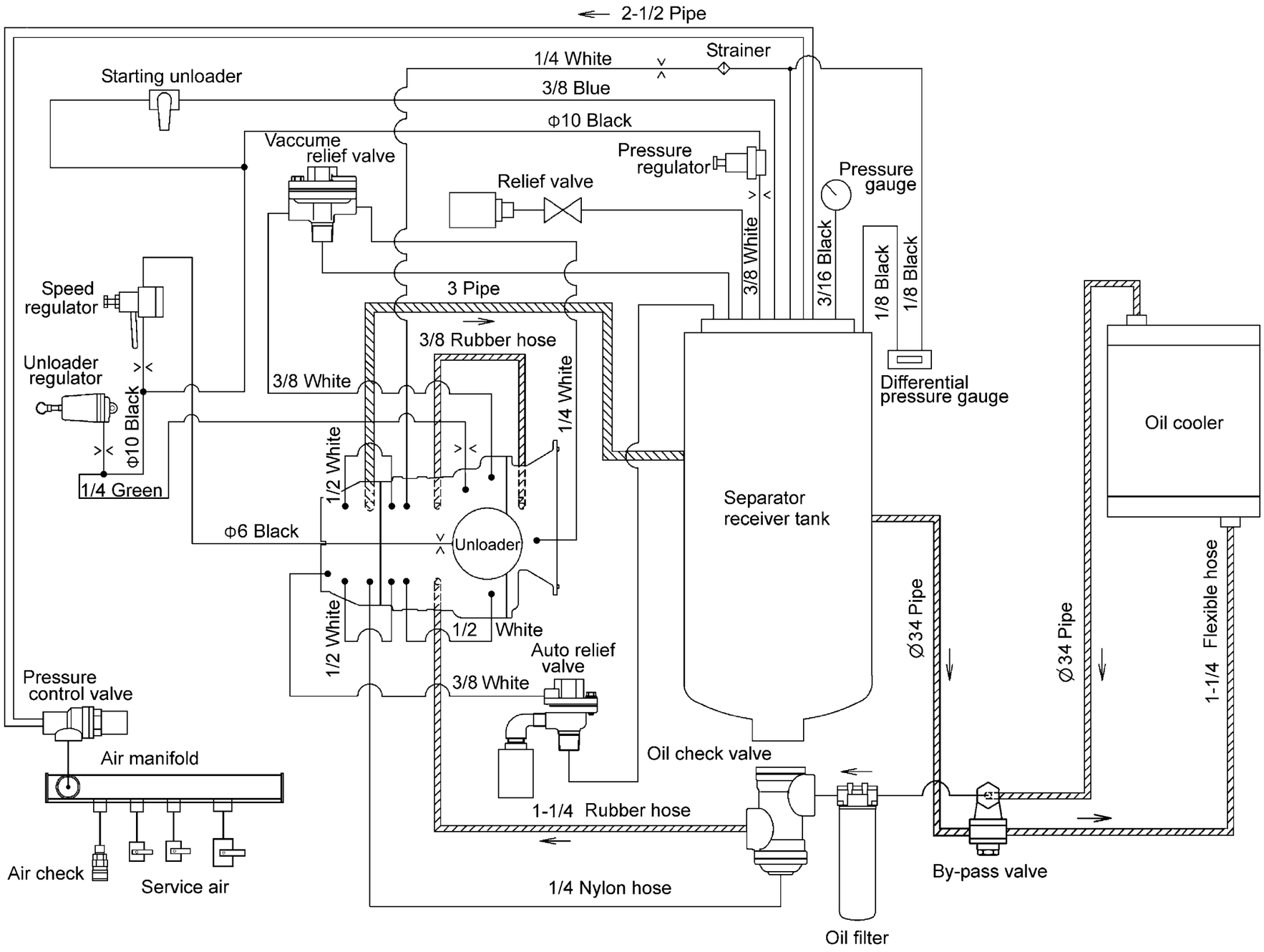

A020290E-1

This text book contains the most recent information available at the time of printing, and the contents of the list are based on information in effect at that time and are subject to change without notice.

ＨＯＫＵＥＴＳＵ ＩＮＤＵＳＴＲＩＥＳ ＣＯ., ＬＴＤ.

8TH FLOOR SHINJUKU SAN-EI BLDG,
22-2 NISHI-SHINJUKU 1-CHOME,SHINJUKU-KU
TOKYO 160-0023 JAPAN
TEL:81-3-3348-7281
FAX:81-3-3348-7289
URL:http//www.airman.co.jp

NPC-0042
PRINTED IN JAPAN 2008.3

AIRMAN
HOKUETSU INDUSTRIES CO., LTD.